HIGH PERFORMANCE SPORT PADS 2014

brembo

INDEX

Introduction 2
Introduzione
Einleitung

Legend 4
Legenda
Legende

Friction material characteristics 5
Caratteristiche del materiale d'attrito
Eigenschaften des Reibmaterials

SECTION 1

Application list 7
Elenco applicazioni
Anwendungsliste

SECTION 2

Pad Drawings 22
Disegni Pastiglie
Zeichnungen Bremsbeläge

INDEX

UK

Brembo, #1 for brakes

Brembo is the world's leading maker of braking systems for motor cars, motorcycles and commercial vehicles. The organization operates on 3 continents, with production sites in 16 countries and sales networks in 70 national territories around the world.

Research never ceases

The Brembo Group has over 7,200 collaborators, nearly 10% of whom are engineers and product specialists involved in research and development.

Brembo - all done in-house

The entire manufacturing process is an in-house operation: design, development, testing, machining, quality control, distribution and service.

Brembo means top quality

Brembo brakes are manufactured in conformity with ISO 9004 and ISO 14001 standards. Aftermarket products are covered by the Brembo Warranty and carry ABE/TÜV certification from the German Federal Road Safety Office.

Top vehicle makers use Brembo

Brembo produces original equipment braking systems for the top vehicle makers: Aston Martin, Audi, BMW, Cadillac, Chrysler, Ferrari, Ford, General Motors, Honda, Lexus, Jeep, Land Rover, Mercedes-Benz, Mitsubishi, Nissan, Porsche, Subaru, Volkswagen, Volvo, to name but a few.

Brembo, racing, and winning

For about 40 years, Brembo has been equipping the cars and bikes of elite drivers and riders competing in motor sports at world championship levels.

Brembo High Performance

The experience accumulated through years of intensive research in the competition field has allowed us to create product lines that are differentiated on the basis of the application types and different research and development procedures adopted. Thanks to the results obtained, car sports
enthusiasts, who insist on replacing original brake systems with Brembo High Performance equipment, are able to improve their riding style in terms of performance and safety while also ramping up the overall aesthetic appeal of their machines.

For additional information, please refer to our website www.brembo.com

I

Brembo è il leader dei freni

Brembo è leader mondiale dei sistemi frenanti per auto, moto, veicoli industriali e commerciali. È attiva in 3 continenti, con stabilimenti produttivi in 16 nazioni e distribuzione in 70 paesi del mondo.

La ricerca non si ferma mai

Il Gruppo Brembo conta sulla collaborazione di oltre 7.200 collaboratori, di cui circa il 10% è composto da ingegneri e specialisti di prodotto che lavorano nella ricerca e sviluppo.

Tutto è prodotto in Brembo

Tutto il processo produttivo è integrato all'interno dell'azienda: progettazione, sviluppo, test, lavorazione, controllo qualità, distribuzione, assistenza.

Il freno Brembo è sinonimo di qualità superiore

I prodotti Brembo sono realizzati in conformità alle normative ISO 9004 e ISO 14001. La gamma aftermarket è accompagnata dalla Garanzia Brembo e dalla certificazione ABE/TÜV del Servizio Federale Tedesco per la Sicurezza Stradale.

I grandi scelgono Brembo

Brembo produce sistemi frenanti di primo equipaggiamento per le maggiori aziende: Aston Martin, Audi, BMW, Cadillac, Chrysler, Ferrari, Ford, General Motors, Honda, Lexus, Jeep, Land Rover, Mercedes-Benz, Mitsubishi, Nissan, Porsche, Subaru, Volkswagen, Volvo, per citare alcuni esempi.

Brembo vince nel racing

Da circa 40 anni Brembo equipaggia le auto e le moto dei grandi piloti nelle più importanti gare mondiali di automobilismo e motociclismo.

Brembo High Performance

L'esperienza accumulata in anni di ricerca e nel campo delle competizioni ha consentito di creare linee di prodotto differenziate in base ai generi ed alle diverse modalità di ricerca e sviluppo applicate.
Grazie ai risultati raggiunti, gli appassionati dello sport automobilistico che sostituiscono l'impianto frenante originale con prodotti Brembo High Performance possono non soltanto migliorare la guida in termini di prestazioni e di sicurezza, ma anche incrementare i contenuti di stile dell'autoveicolo.

Per ulteriori informazioni consultate il nostro sito web www.brembo.com

Brembo ist führender Bremsenhersteller

Brembo ist der weltweit führende Hersteller von Bremsanlagen für PKW, Motorräder und NFZ. Brembo ist auf 3 Kontinenten tätig, verfügt über Produktionswerke in 16 Ländern und vertreibt die eigenen Produkte in 70 Ländern.

Forschung und Entwicklung hält nie an

Die BREMBO Gruppe kann auf 7.200 engagierte Mitarbeiter zählen, fast 10% von ihnen sind Ingenieure und Produktspezialisten in Forschung und Entwicklung.

Alles wird in Eigenregie hergestellt

Der gesamte Produktionsprozess ist firmenintern integriert: Planung, Entwicklung, Tests, Bearbeitung, Qualitätskontrolle, Vertrieb, Service.

Brembo bedeutet Top-Qualität

Die Herstellung der Brembo-Produkte erfolgt nach den Vorgaben der Normen ISO 9004 und ISO 14001. Alle Aftermarket-Produkte sind mit Brembo-Garantie und ABE/TÜV Zulassungszertifikat versehen.

Die Grossen wählen Brembo

Brembo produziert Bremsanlagen zur Erstausrüstung der Fahrzeuge weltweit führender Automobilhersteller: Aston Martin, Audi, BMW, Cadillac, Chrysler, Ferrari, Ford, General Motors, Honda, Lexus, Jeep, Land Rover, Mercedes-Benz, Mitsubishi, Nissan, Porsche, Subaru, Volkswagen, Volvo, um nur einige Beispiele zu nennen.

Brembo gewinnt im Rennsport

Seit ca. 40 Jahren rüstet Brembo die Fahrzeuge und Motorräder der erfolgreichsten Rennfahrer für die weltweit wichtigsten Rennsportereignisse aus.

Brembo High Performance

Die in langjähriger Forschungstätigkeit und auf dem Gebiet des Rennsports gesammelte Erfahrung führte je nach Genre und den angewandten unterschiedlichen Forschungs- und Entwicklungsansätzen zur Entstehung differenzierter Produktlinien. Dank der erzielten Ergebnisse können die Automobilsportbegeisterten, die die Original-Bremsanlage durch Brembo High Performance Produkte ersetzen, nicht nur die Fahrt in punkto Leistung und Sicherheit verbessern, sondern auch die Aesthetik des Fahrzeugs erhöhen.

Für weitere Informationen, besuchen Sie bitte unsere Webseite
www.brembo.com

CAPTIONS

	ENGLISH	ITALIANO	TEDESCO
	Application	Applicazione	Einbau
kW	Engine power	Potenza motore	Motorleistung
	Year	Anno	Jahr
	Front axle	Asse anteriore	Vorderachse
	Rear axle	Asse posteriore	Hinterachse
Part Number	Part number	Codice articolo	Artikelnummer
	Information	Informazioni	Information
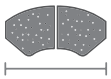	Pad length (mm)	Lunghezza pastiglia (mm)	Länge des Bremsbelags (mm)
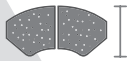	Pad height (mm)	Altezza pastiglia (mm)	Höhe des Bremsbelags (mm)
	Pad thickness (mm)	Spessore pastiglia (mm)	Stärke des Bremsbelags (mm)
	WVA: International brake pad code	WVA: Codice internazionale della pastiglia	WVA: Internationaler Code des Bremsbelags

General Notes: Pads references are available on TecDoc, on the “High Performance” section.
The data contained in this catalogue are provided for information purposes only and therefore may be subject to change.

FRICTION MATERIAL CHARACTERISTICS

HP2000

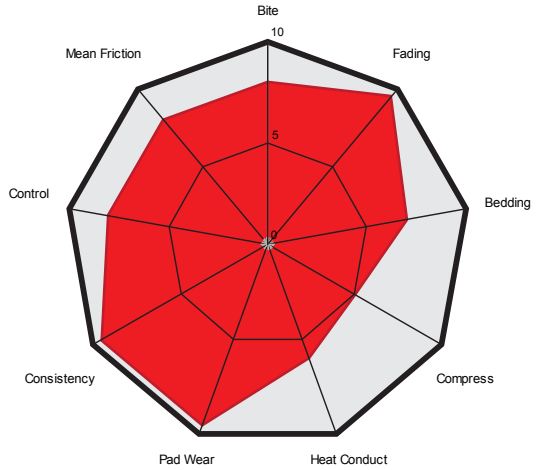

OE

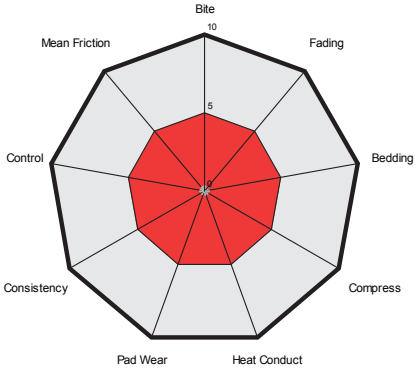

Market Benchmark

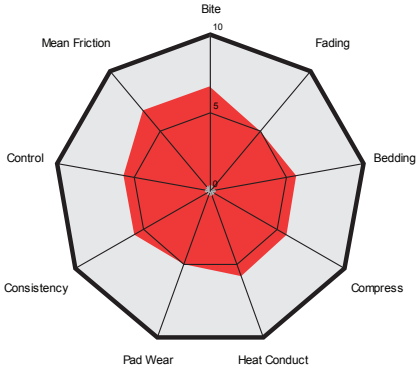

HP1000

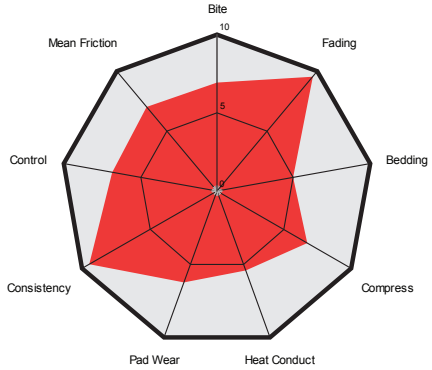

UK

Friction material characteristics

Bite: Friction measured at the beginning of braking action
Mean Friction: Average level of friction during braking
Control: High level and constant coefficient of friction in the various conditions of use
Consistency: Capability to repeat the same curve of friction stop after stop
Pad wear: Loss of material (reduction of thickness)
Heat Conduct: Thermal conductivity of the material
Compressibility: Elasticity of the material during compression
Bedding: Ability to make the disc ready for a right use in short time
Fading: Reduction of friction level due to the temperature.

HOMOLOGATION FOR ROAD USE:
Brembo Sport pads are ECE-R90 approved, with marking to enable identification.

I

Caratteristiche del materiale d'attrito

Attacco: Attrito misurato all'inizio della frenata
Attrito medio: Livello medio dell'attrito durante la frenata
Modulabilità: Coefficiente d'attrito elevato e costante nelle varie condizioni di utilizzo
Consistenza: Capacità di mantenere costante il coefficiente d'attrito
Usura pastiglia: Riduzione dello spessore pastiglia dovuto all'uso
Conducibilità termica: Capacità di trasmissione del calore attraverso il materiale
Compressibilità: Elasticità del materiale quando soggetto a compressione
Rodaggio: Capacità di rodare velocemente il disco
Fading: Riduzione del coefficiente d'attrito dovuto alla temperatura.

OMOLOGAZIONE STRADALE:
Le pastiglie Sport Brembo hanno ottenuto l'omologazione secondo la normativa ECE-R90, con marcatura che ne consente l'identificazione.

D

Eigenschaften des Reibmaterials

Griffigkeit: Reibung gemessen zu Beginn der Bremsung
Mittlere Reibung: Mittelwert der Reibkraft während der Bremsung
Kontrolle: Hohe, konstante Reibkraft bei unterschiedlichen Nutzungsbedingungen
Beständigkeit: Fähigkeit, die Reibung nach jeder Bremsung konstant zu halten
Verschleiß des Belages: durch Abnutzung (Minderung der Belagstärke)
Thermisches Verhalten: Wärmeleitfähigkeit
Verdichtbarkeit: Verdichtung des Materials während der Bremsung
Einbremsen: Fähigkeit, die Bremsscheibe schnellstmöglich und optimal einzubremsen
Fading: Herabsetzung der Reibwerte aufgrund der Temperatur.

ZULASSUNG FüR STRASSENVERWENDUNG
Die Brembo Sportbeläge verfügen über die Betriebserlaubnis nach ECE-R90 und die entsprechende Kennmarkierung.

brembo
07.B314.99 HP2000
E1 90R-01997/034
B001 BRE2010

		kW	31		F - Part Number		R - Part Number		
ACURA									
LEGEND II & III	3.2, 3.5	151	08.91		F	07.B314.44			
NSX	3.0, 3.2	188 - 206	01.90		F	07.B314.44			
ALCON									
VARIOUS - Mono 6	Equivalent to PNP 4497				F	07.B314.77			
ALFA ROMEO									
33 (907A)	1.4, 1.5,1.7, 1.8TD	58 - 101	01.86	09.94			R	07.B315.24	
75 (162B)	1.8Turbo, 2.0TS	110	05.85	08.89	F	07.B315.27			
90 (162)	2,5	110 - 114	10.84	07.87	F	07.B315.27			
145 & 146	1.4, 1.6, 1.7, 1.8, 2.0, 1.9D, 1.9TD, 1.9JTD	66 - 114	07.94	01.01			R	07.B315.24	
147	2.0, 1.9JTD		01.00		F	07.B314.29			
147	3.2 GTA	184	02.03		F	07.B314.39			
147/156/GT							R	07.B315.23	
155 (167)	1.6, 1.7, 1.8, 2.5, 1.9TD, 2.0Turbo, 2.5TD	83 - 121	02.92	12.97	F	07.B314.29	R	07.B315.24	
156	2.0, 2.5, 2.4JTD		02.97		F	07.B314.29			
156 (932)	1.9 JTD	110	07.04	05.06	F	07.B314.48			sport susp.
156 (932)	3.2 GTA	184	03.02	05.06	F	07.B314.39			
159	1.8TBi, 3.2JTS, 2.4JTD	147 - 191	09.05	12.07	F	07.B314.48			
166 (936)	2.0, 2.5, 3.0, 3.2, 2.4JTD	129 - 176	09.98	10.00	F	07.B314.48			
BRERA	1.8TBi, 3.2JTS, 2.4JTDM	147 - 191	01.06			07.B314.48			
GT	3.2 GTA	176	11.03			07.B314.48			
GTV (916C)	3.0 V6, 3.2 V6	160 - 176	10.96			07.B314.39	R	07.B315.24	
GTV (916C)	1.8, 2.0, 2.0T.Spark, 2.0Turbo, 2.0JTS	106 - 148	06.95				R	07.B315.24	
MITO (ZAR955)	1.4	58 - 70	09.08			07.B314.04			
MITO (ZAR955)	1.4TB, 1.4Turbo	110 - 114	09.08			07.B314.21			
RZ	3.0 V6	152	01.92	12.94	F	07.B315.27			
SPIDER (916S)	1.8, 2.0 T.Spark	106 - 148	05.98	04.05			R	07.B315.24	
SPIDER (916S)	3.0V6, 3.2V6	160 - 176	01.99	04.05	F	07.B314.39	R	07.B315.24	
SPIDER (939)	1.8TBi, 3.2JTS	147 - 191	09.06		F	07.B314.48			
SZ	3.0 V6	152	09.08	08.94	F	07.B315.27			
ALPINA									
ROADSTER	4.8 V8	280	06.02				R	07.B315.01	
AP RACING									
VARIOUS	Equivalent to CP 7400 D58				F	07.B314.61			
VARIOUS	Equivalent to CP 6600 D54				F	07.B314.62			
VARIOUS	Equivalent to CP 7600 D46						R	07.B315.32	
ASTON MARTIN									
DB9			04.04		F	07.B314.48	R	07.B314.03	
VANQUISH					F	07.B314.30	R	07.B314.03	

The data contained in this catalogue are provided for information purposes only and therefore may be subject to change.

		kW	31		F - Part Number		R - Part Number		
VANTAGE	V8		04.04		F	07.B314.48	R	07.B314.03	
AUDI									
100 (4A,C4)	1.6, 2.0, 2.3, 2.6, 2.8, 2.4D, 2.5TDi	74 - 128	12.90	06.94	F	07.B314.54			
A1 (8X1)	1.2TFSI, 1.4TFSI, 1.6TDI, 2.0TDI	63 - 105	05.10		F	07.B314.53	R	07.B315.25	
A1 (8X1)	2.0TFSI Quattro	188	03.12		F	07.B314.52	R	07.B315.25	
A2 (8Z0)	1.4, 1.4TDI, 1.6FSI	55 - 81	02.00	08.05	F	07.B314.53	R	07.B315.25	
A3 (8L1)	1.6, 1.8, 1.9TDI	66 - 81	06.96	07.01	F	07.B314.53	R	07.B315.25	
A3 (8L1)	1.8T, S3, 1.9TDI	92 - 165	06.96	07.03	F	07.B314.54 or .70*	R	07.B315.25	*different wear indicators
A3 (8P1)	1.6, 1.2TSI, 1.4TFSI, 1.6FSI, 1.6&1.9TDI	75 - 92	05.03		F	07.B314.53	R	07.B315.22or.25	Changes by R disc Ø ref note 1
A3 (8P1)	2.0, 2.0FSI, 1.4, 1.8&2.0TSFI, 2.0TDI	92 - 147	05.03		F	07.B314.52	R	07.B315.22or.25	Changes by R disc Ø ref note 1
A3 (8P1)	3.2V6, S3	184 - 195	07.03		F	07.B314.55	R	07.B315.22or.25	Changes by R disc Ø ref note 1
A3 (8PA)	RS3	250	04.11		F	07.B314.48	R	07.B315.22	
A4 (8D2, B5)	1.8, 2.4, 2.6, 2.8, 1.8T, 1.9 & 2.5TDI	81 - 147	01.95	11.00	F	07.B314.54	R	07.B315.25	
A4 (8D2, B5)	2.7T, 2.7BiTurbo, S4	169 - 195	09.97	11.00	F	07.B314.55	R	07.B315.25	
A4 (8E2, B6)	1.6, 2.0, 2.4, 3.0, 1.8T, 2.0FSI, 1.9,2.0&2.5TDI	75 - 162	11.01	12.04	F	07.B314.54	R	07.B315.00or.25	Changes by R disc Ø ref note 1
A4 (8EC)	1.6,2.0,1.8T,2.0&3.2.0FSI,2.0TFSI, 1.9,2.0,2.5&3.0TDI	85 - 160	11.04	01.06	F	07.B314.54	R	07.B315.00.22or.25	Changes by R disc Ø ref note 1
A4 (8EC)	2.0&3.2TFSI, 2.5, 2.7&3.0TDI	125 - 253	11.04	01.06	F	07.B314.55	R	07.B315.00.22or.25	Changes by R disc Ø ref note 1
A4 (8EC, B7)	RS4	309	05.08		F	07.B314.01	R	07.B315.00	
A4 (8K2)	1.8TSFI, 2.0&3.2FSI, 2.0, 2.7&3.0TDI	105 - 195	11.07		F	07.B314.05			
A5 (8T)	1.8&2.0TFSI, 3.0FSI, S5, 2.0, 2.7&3.0TDI	118 - 245	06.07		F	07.B314.05			
A6 (4A, C4)	1.8, 2.0, 2.3, 2.4, 2.6, 2.8, 1.9&2.5TDI	75 - 142	06.90	10.97	F	07.B314.54 or 69*			*different wear indicators
A6 (4B, C5)	1.8, 2.0, 2.4, 2.8, 1.8T, 1.9&2.5TDI	85 - 142	02.97	01.05	F	07.B314.54	R	07.B315.25	
A6 (4B, C5)	RS6	331	07.02	01.05	F	07.B314.01	R	07.B315.00	
A6 (4F2)	2.4, 2.0TFSI, 2.0&2.7TDI	89 - 132	05.04		F	07.B314.54	R	07.B315.00or.22	Changes by R disc Ø ref note 1
A6 (4F2)	3.0, 4.2, 2.8,3.2&4.2FSI, 3.0TFSI, 2.7&3.0TDI	120 - 257	05.04		F	07.B314.55	R	07.B315.00or.22	Changes by R disc Ø ref note 1
A6 (4F2)	4.2, 4.2FSI	246 - 257	05.04		F	07.B314.55	R	07.B315.00	
A6 (4G2, C7)	2.0TFSI, 2.8FSI, 3.0TFSI, 2.0TDI, 3.0TDI	120 - 228	01.10		F	07.B314.05			
A7 (4GA)	2.8FSI, 3.0TFSI, 3.0TDI	150 - 228	10.10		F	07.B314.05			
A8 (4D2, 4D8)	2.8, 3.7, 4.2, 6.0, S8, 2.5&3.3TDI	110 - 265	03.94	11.98	F	07.B314.54	R	07.B315.25	
A8 (4E_)	3.0, 3.7, 6.0, 2.8, 3.2&4.2FSI, S8, 3.0, 4.0&4.2TDI	154 - 331	03.03	07.10	F	07.B314.55	R	07.B315.00	
Q5	2.0TFSI, 3.2FSI, 2.0&3.0TDI	105 - 199	11.08		F	07.B314.05			
Q7	4.2FSI, 4.2&6.0 TDI	155 - 368	03.06		F	07.B314.20			
Q7	3.0 TDI	155 - 176	03.06		F	07.B314.20	R	07.B315.16	
R8	4.2 V8				F	07.B314.01	R	07.B314.30	
TT (8J3)	1.8&2.0 TSFI, 2.0TDI	118 - 147	05.08		F	07.B314.52			
TT (8J3)	2.0, 2.0TSFI, 2.5TFSI, 3.2V6	184 - 200	05.08		F	07.B314.27or.55	R	07.B315.22	
TT (8N3)	1.8T, 3.2VR6	110 - 184	10.98	06.06	F	07.B314.27, .54 or .69*	R	07.B315.25	*different wear indicators
TT	RS 2.5				F	07.B314.48	R	07.B315.22	
BREMBO GT KITS									
GT KIT	4 piston 110mm Pad				F	07.B314.03			
GT KIT	4 Piston 132mm Pad				F	07.B314.30			
GT KIT	6 Piston Narrow Annulus				F	07.B314.58			

The data contained in this catalogue are provided for information purposes only and therefore may be subject to change.

		kW	31		F - Part Number		R - Part Number	
GT KIT	6 piston Medium Annulus				F	07.B314.59		
GT KIT	8 Piston				F	07.B314.01		
BMW								
1 (E81,E87)	116i, 118i, 120i, 130i, 116d, 118d, 120d, 123d	85 - 190	04.07	01.07	F	07.B314.02		
1 (E81,E87)	120i, 120d	110 - 120	03.07	01.07	F	07.B314.33		
1 (E81,E87)	120i,130i, 120d, 123d,	110 - 190	01.06		F	07.B314.34		
1 (E81,E87)	116i, 118i, 120i, 130i, 116d, 118d, 120d	85 - 125	04.07	01.07	F	07.B314.47		
1 (E87)	120i, 120d	110 - 120	03.07	01.07	F	07.B314.33		
1 (E82)	135i	225	10.07		F	07.B314.02	R	07.B315.03
1 (E82) 1M	3.0 Turbo	250	01.11		F	07.B314.35	R	07.B315.02
3 (E36)	316i,318i,320i,325i,328i, 318tds, 320tds, 325tds	66 - 105	09.90	02.98	F	07.B314.31		
3 (E36)	M3	210 - 236	01.04	12.98	F	07.B314.32		
3 (E46)	316,318,320,323,325&328i, 318&320tds	73 - 142	04.98	02.98	F	07.B314.31	R	07.B315.26
3 (E46)	330i, 330d	135 - 170	09.00	02.05			R	07.B315.01
3 (E90)	316i,318i,320i,325i, 318d,320d,325d	85 - 160	02.05		F	07.B314.02or.33or.34		
3 (E90)	330i, 335i, 330d, 335d	170 - 225	05.12		F	07.B314.35		
3 (E90)	M3	309	03.07		F	07.B314.35	R	07.B315.02
5 (E34)	518i,520i,525i,530i,535i,540i, 524td,525td	85 - 210	01.88	09.95	F	07.B314.32		
5 (E34)	3.6M5, 3.8 M5	232 - 294	10.89	09.95			R	07.B315.01
5 (E60)	520i,523i,525i,530i, 520d,525d,530d	95 -200	07.03		F	07.B314.35		
5 (E60)	540i, 545i, 550i, 535d	200 - 270	09.03		F	07.B314.35	R	07.B315.02
5 (E60)	M5	373	09.04				R	07.B315.02
6 (E63)	630i, 645i, 650i	190 - 270	01.04		F	07.B314.35	R	07.B315.02
6 (E63)	650i, M6, 635d	210 - 373	07.05				R	07.B315.02
7 (E32)	730i, 735i 740i, 750i	145 - 220	12.86	09.94	F	07.B314.32		
7 (E38)	728i,730i,735i,740i, 730d, 740d, 725tds	105 - 180	10.94	11.01	F	07.B314.36	R	07.B315.01
7 (E65,E66)	730i, 735i, 730d	160 - 200	10.02		F	07.B314.35	R	07.B315.01
7 (E65,E66)	735i, 745i, 760i, 730d, 760d	190 - 320	10.02		F	07.B314.35	R	07.B315.02
8 (E31)	840i, 850i	210 - 240	03.94	12.99	F	07.B314.36	R	07.B315.01
TRANSPORTER V BOX	M 3	309	01.90	12.96	F	07.B314.32	R	07.B315.35
X1 (E84)	xDrive23d	150	10.09		F	07.B314.34		
X3 (E83)	2.0i, 2.5i, 3.0i, 2.0d, 3.0d	110 - 210	01.04				R	07.B315.01
X5 (E53)	3.0i, 4.4i, 4.6i, 4.8i, 3.0d	135 - 265	09.08				R	07.B315.01
X5 (E70)	4.8i, 3.0d, 3.5d	173 - 261	02.07				R	07.B315.02
X6 (E71)	3.5i, 5.0i, 3.5d	210 - 300	05.08				R	07.B315.02
Z3	1.8, 1.9, 2.0, 2.2, 2.8, 3.0	85 - 170	10.95	01.03	F	07.B314.31		
Z4 (E85)	2.0i, 2.2i, 2.5i, 3.0i	110 - 195	02.03		F	07.B314.31	R	07.B315.26
Z4 (E85)	3.2M	252	03.06				R	07.B315.01
Z8	4.9	294	06.00	06.03			R	07.B315.01
CHEVROLET								
CRUZE	1.3, 1.3 AWD	61	07.00				R	07.B315.09
DODGE VIPER	8.0	282 -335	07.98	08.02	F	07.B314.39		
MERIVA	1.8	82 - 84	03.03		F	07.B314.26	R	07.B315.21

The data contained in this catalogue are provided for information purposes only and therefore may be subject to change.

		kW	31		F - Part Number		R - Part Number		
ZAFIRA (F75)	2.0, 2.2	85 - 100	04.01	07.04	F	07.B314.26	R	07.B315.21	
CITROEN									
C2 (JM_)	1.4i, 1.6i, 1.4HDi, 1.6HDi	80 - 90	09.03		F	07.B314.38	R	07.B315.25	
C3	1.1, 1.4, 1.6, 1.6HDi	44 - 88	11.09		F	07.B314.38	R	07.B315.25	
C3 (FC_)	1.6, 1.6HDi	80	02.02		F	07.B314.11	R	07.B315.25	
C3 (FC_)	1.4, 1.6, 1.6HDi	65 - 80	02.02		F	07.B314.38	R	07.B315.25	
C4 (LC_)	1.4, 1.6	65 - 80	11.04		F	07.B314.38	R	07.B315.25	no ESP
C4 (LC_)	1.4, 1.6, 2.0, 1.6HDi, 2.0 HDi	66 - 88	11.04		F	07.B314.11	R	07.B315.25	
C8 (EA_, EB_)	2.0, 2.2, 2.0HDi, 2.2HDi	79 - 150	07.02				R	07.B315.25	
DS3	1.4, 1.6HDi	68 - 70	11.09		F	07.B314.38	R	07.B315.25	fitted with 266mm front disc
DS3	Racing	68 - 70	11.09		F	07.B314.48	R	07.B315.25	
NEMO	1.4, 1.4HDi	50 - 54	02.08		F	07.B314.04			
SAXO (S0, S1)	1.4, 1.6	55 - 88	02.96	04.04	F	07.B314.37	R	07.B315.13	
XSARA (N1)	1.6, 1.8, 2.0, 1.8D, 1.9D, 1.4&2.0HDi	50 - 100	04.97	09.00	F	07.B314.37or.38	R	07.B315.13	
XSARA (N1)	2.0, 2.0HDi	80 - 100	01.02	08.05	F	07.B314.11	R	07.B315.13	
XSARA (N2)	1.4i, 1.6i, 1.5D,1.8D, 1.9D	42 - 65	10.97	08.00	F	07.B314.37	R	07.B315.13	
XSARA (N2)	1.4HDi,1.6i, 1.5D,1.8D, 1.9D	50 - 80	10.97	08.05	F	07.B314.38	R	07.B315.13	
XSARA (N2)	2.0 16V, 2.0HDi	80 - 100	10.97	08.05	F	07.B314.11	R	07.B315.13	
XSARA PICASSO (N68)	1.6, 1.8, 2.0, 1.6HDi, 2.0HDi	65 - 100	12.99		F	07.B314.11	R	07.B315.25	with EPS
XSARA PICASSO (N68)	1.6, 1.8, 2.0, 1.6HDi, 2.0HDi	65 - 100	12.99		F	07.B314.38	R	07.B315.25	no EPS
ZX (N2)	1.6, 1.8, 1.9, 2.0, 1.9TD	65 - 120	06.92	10.97			R	07.B315.13	
DAEWOO									
LUBLIN II	2.4D, 2.4TD	52 - 66	04.97		F	07.B314.50			
DAIMLER									
X300	4.0, 6.0	163 - 229	10.89	08.05	F	07.B314.32			
XJ40	4.0	163	10.89	09.94	F	07.B314.32			
FERRARI									
360	3.6				F	07.B314.03	R	07.B314.03	
430	4.3				F	07.B314.03	R	07.B314.03	
F40	3.0				F	07.B314.30	R	07.B314.30	
FIAT									
500	1.4 (07 on) & 1.3 D Multijet (09 on)	74 & 70D	10.07		F	07.B314.04	R	07.B315.30	
500	1.2	51	10.07		F	07.B314.28	R	07.B315.30	
500	1.4 Abarth	99	08.08		F	07.B314.40	R	07.B315.30	
BARCHETTA (183)	1.8 16V	96	04.95				R	07.B315.24	
BRAVO (182)	2.0 & 2.0 HGT 20V	108 - 103	10.95	10.01	F	07.B314.29	R	07.B315.24	
BRAVO (198)	1.4, 1.6D, 1.9D	66-88			F	07.B314.29			
COUPE (FA175)	2.0 20V Turbo	162	08.96	08.00	F	07.B314.39	R	07.B315.24	
COUPE (FA175)	1.8, 2.0	96-140	11.93	08.00	F	07.B314.29	R	07.B315.24	

The data contained in this catalogue are provided for information purposes only and therefore may be subject to change.

		kW	31		F - Part Number		R - Part Number		
DOBLO	1.2, 1.6, 1.3 JTD, 1.9D	48 - 88	03.01		F	07.B314.04			
FIORINO	1.4 & 1.3D Multijet	55	02.08		F	07.B314.04			
GRANDE PUNTO (199)	1.2, 1.4, 1.3D Multijet	48 - 70	10.05		F	07.B314.04			
GRANDE PUNTO (199)	1.4TJet, 1.3D Multijet, 1.9D Multijet	66 - 96	10.05		F	07.B314.40			
GRANDE PUNTO (199)	1.4 Abarth	114	12.07		F	07.B314.21			
IDEA	1.3D Multijet, 1.9 JDT	66 - 74	01.04	12.05	F	07.B314.40			
LINEA	1.4Tjet, 1.6D Multijet	77 - 88	09.07		F	07.B314.40			
MAREA (185)	2.0, 2.4TD, 2.4JTD	91 - 113	09.96	01.01	F	07.B314.29	R	07.B315.24	
MULTIPLA (186)	1.6, 1.9JRD	68 - 88	04.99		F	07.B314.29or.40			
PANDA (169)	1.1, 1.2, 1.4, 1.3d Multijet	40 - 74	09.03		F	07.B314.28	R	07.B315.23	
PUNTO (176)	1.1, 1.2, 1.7D	40 - 51	09.03		F	07.B314.28			
PUNTO (176)	1.4 GT Turbo	98	01.94	09.99			R	07.B315.24	
PUNTO (188)	1.2	44	09.99		F	07.B314.28			
PUNTO (188)	1.8HGT, 1.9JTD	74 - 96	09.99	06.00			R	07.B315.23	
QUBO	1.4, 1.3D	55	09.08		F	07.B314.04			
SEICENTO (187)	0.9, 1.1	29 - 40	01.98		F	07.B314.28			
STILO (192)	1.4, 1.6, 1.8, 1.9D, 1.9JTD	59 -110	10.01		F	07.B314.40			
TEMPRA (159)	1.4, 1.6, 1.4, 1.8, 2.0, 1.9D, 1.9TD	51 - 83	03.90	08.96			R	07.B315.24	
TIPO (160)	1.1, 1.4, 1.6, 1.8, 2.0, 1.7D, 1.9D, 1.9TD	41 - 102	07.87	04.95			R	07.B315.24	
ULYSSE (179AX)	2.0, 3.0, 2.0D, 2.0JTD	79 -150	08.02				R	07.B315.25	
UNO (146A/E)	1.4, 1.6, 1.6R, 1.3 Turbo, 1.4 Turbo	65 - 87	01.89	12.96			R	07.B315.24	
FORD									
FIESTA IV (JH_JD_)	1.0, 1.25, 1.3, 1.4, 1.6, 1.8D	37 - 76	02.00	01.02	F	07.B314.43	R	07.B315.23	with ABS
FIESTA IV (JA_JB_)	1.25, 1.4, 1.6, 1.4TDCi, 1.6TDCi	51 - 74	11.01		F	07.B314.43			
FIESTA IV (JA_JB_)	ST 150	110	03.05		F	07.B314.42			
FIESTA V (JH_JD_)	1.25, 1.3, 1.4, 1.6, 1.4TDCI, 1.6TDCI	44 - 74	11.01		F	07.B314.43			
FOCUS (DAW,DBW)	ST170	127	03.02	11.04	F	07.B314.42			
FOCUS (DAW,DBW)	RS	158	10.02	11.04	F	07.B314.39			
FOCUS II (DA_)	2.5 ST	166	10.05		F	07.B314.41			
FOCUS II (DA_)	2.5 RS	224	01.09		F	07.B314.05	R	07.B315.04	
FUSION (JU_)	1.3,1.4, 1.6, 1.25, 1.4TDCi, 1.6TDCi	44 - 74	08.02		F	07.B314.43			
GALAXY	2.0, 2.3, 1.8TDCi, 2.0TDCi	74 - 129	05.06				R	07.B315.04	
GALAXY	All models	74 - 147	01.06				R	07.B315.34	with electronic handbrake
GALAXY (WGR)	2.0, 2.3, 2.8, 1.9TDI	66 - 128	03.95	04.00			R	07.B315.25	
KA	1.2	51	02.09	04.00	F	07.B314.28			
KA(RB)	1.6i	70	07.03		F	07.B314.43			
KUGA	2.5 4x4, 2.0TDCi	100 - 147	03.08				R	07.B315.04	
MONDEO IV	1.6, 2.0, 2.3, 2.5, 1.8TDCi, 2.0TDCi	74 - 162	03.07				R	07.B315.04	
PUMA (EC)	1.6 16V, 1.7 16V, ST160	76 - 118	02.00		F	07.B314.43			
S-MAX	2.0, 2.3, 2.5ST, 1.8TDCi, 2.0TDCi	74 - 162	05.06				R	07.B315.04	
STREET KA	1.6	70	05.03	07.05	F	07.B314.43			
TOURNEO CONNECT	1.6, 1.8, 1.8Di, 1.8TDCi, 1.8 Turbo Di	55 - 85	06.02		F	07.B314.42			
TRANSIT CONNECT	1.8 16V, 1.8Di, 1.8TDCi	55 - 85	06.02		F	07.B314.42			

The data contained in this catalogue are provided for information purposes only and therefore may be subject to change.

		kW	31		F - Part Number		R - Part Number		
HONDA									
ACCORD IV (CB8,CB9)	2.0, 2.2	98 - 110	01.91	12.93	F	07.B314.44			
ACCORD V (CE,CF)	1.9, 2.0, 2.2, 2.3	85 - 110	03.93	10.98	F	07.B314.44			
ACCORD VI (CE,CF)	1.9, 2.0	85 - 96	02.96	10.98	F	07.B314.44			Auto
ACCORD VII	2.0, 2.2, 2.3, 3.0, 2.2TypeR	108 - 156	02.98	06.03	F	07.B314.44			
ACCORD VIII	2.0, 2.2CTDi, 2.4	103 - 140	04.03				R	07.B315.05	
CIVIC VI	1.8 16V	124	01.97	02.01	F	07.B314.44			
CIVIC VII	1.6i, 1.7i, 2.0i, 1.7i VTEC	55 - 92	02.01	12.05			R	07.B315.05	
CIVIC VII	2.0i Sport, 2.0 Type R	118 - 147	01.04	09.05	F	07.B314.45	R	07.B315.05	
CIVIC VIII (FD)	1.3 Hybrid, 1.3, 1.6, 1.8, 2.0	70 - 114	09.05				R	07.B315.05	
CR-V I (RD)	2.0	94 - 108	01.99	02.02	F	07.B314.44			
CR-V II (RD_)	2.0, 2.4 Vtec All-wheel drive	110 - 118	03.02	10.04			R	07.B315.05	
FR-V (BE)	1.7, 1.8, 2.0, 2.2i CTDi	92 - 110	01.07				R	07.B315.05	
HR-V (GH)	1.6	77 - 91	03.99		F	07.B314.44			
INTEGRA (DC5)	2.0 16V Type-R	162	02.02		F	07.B314.36			
INTEGRA (DC5)	2.0, 1.8 16V Type-R	118 - 140	11.97		F	07.B314.44			
LEGEND II, III & IV	3.2i 24V,3.5, 3.5i 24V, 3.5 & 3.7 V6	151 - 221	10.04		F	07.B314.44			
NSX	3.0, 3.2	188 - 201	03.95		F	07.B314.44			
PRELUDE IV & V	2.2 & 2.3 16V	118 - 147	02.93	10.00	F	07.B314.44			
S2000	2.0, 2.0 & 2.2 Vtec	170 - 184	06.99		F	07.B314.45	R	07.B315.05	
SHUTTLE	2.2 & 2.3 16V	110	10.94	06.02	F	07.B314.44	R	07.B315.05	
STEPWAGON	2.0, 2.4, 2.0 4WD	118	10.00	09.05	F	07.B314.44			
STREAM	1.7 & 2.0 16V	92 - 118	05.01				R	07.B315.05	
HYUNDAI									
ELANTRA (XD)	1.6, 1.8, 2.0, 2.0 CRDi	66 - 105	06.00				R	07.B315.12	
LANTRA I & II	1.5, 1.6, 1.8, 1.9, 2.0	63 - 102	10.90	09.00			R	07.B315.12	
TIBURON Coupe	1.6 & 2.0 CVVT	78 - 105	10.06				R	07.B315.12	
JAGUAR									
S TYPE (CCX)	2.5, 2.7D, 4.2V8, R 4.2V8	147 - 291	04.02				R	07.B314.39	
XJ (NAW<NBW)&(XJ300)	3.2, 4.0, 6.0, R S/charged 4.0	174 - 235	11.94	07.97	F	07.B314.32			
XJ (350,X358)	R 4.2	291	05.03				R	07.B314.39	
XJ (XJ40,81)	2.9, 3.2, 4.0	108 - 187	10.89	11.94	F	07.B314.32			
XJS	3.6, 4.0, 5.3, 6.0	136 - 248	10.89	03.96	F	07.B314.32			
XK8	4.0, 4.2, R4.2	209 - 291	02.98		F	07.B314.32			
XK8 (QEV)	4.2R, 4.0XKR	276 - 291	01.98	01.07	F	07.B314.30	R	07.B314.39	with Brembo brakes
KIA									
CERATO	1.6, 1.8, 2.0, 1.5CRDi, 1.6CRDi, 2.0CRDi, 1.8CVVT	77 - 105	04.04				R	07.B315.12	
LAMBORGHINI									
DIABLO	5.7 & 6.0 VT	390 - 423			F	07.B314.30	R	07.B314.30	

The data contained in this catalogue are provided for information purposes only and therefore may be subject to change.

		kW	31		F - Part Number		R - Part Number		
GALLARDO	5.0	368			F	07.B314.01	R	07.B314.30	
LANCIA									
DEDRA (835)	1.6, 1.8, 2.0, 2.0 Turbo, 1.9TDS	57 - 124	08.89	07.99			R	07.B315.24	
DELTA I (831ABO)	1.6 Turbo, 2.0, 2.0 16V	122 - 155	08.86	01.94	F	07.B314.39			
DELTA II (836)	1.6, 1.8, 2.0, 1.9TD	66 - 142	03.96	08.99			R	07.B315.24	
DELTA III (844)	1.4, 1.6D Multijet	88	09.08		F	07.B314.40			
KAPPA (838A)	2.0 20V Turbo, 3.0 24V	150 - 162	08.94		F	07.B314.48			
MUSA	1.3D, 1.6D &1.9D Multijet	66 - 74	07.08		F	07.B314.40	R	07.B315.23	
PHEDRA	2.0, 3.0V6, 2.0d Multijet, 2.0JTD, 2.2JTD	79 - 150	09.02				R	07.B315.25	
Y	1.1, 1.2	40 - 44	11.95	09.03	F	07.B314.28			
YPSILON	1.3D Multijet	66 - 77	09.06				R	07.B315.23	
LAND ROVER									
DEFENDER (LD)	3.5, 3.9, 2.8 Allrad, 2.4Td4, 2.5TDI, 2.5D, 2.5Td5	83 - 136	09.90		F	07.B314.57	R	07.B315.28	
DEFENDER (LD)	3.5, 3.9, 2.8 Allrad, 2.4Td4, 2.5TDI, 2.5D, 2.5Td5	51 - 136	06.98		F	07.B314.57	R	07.B315.29	
DISCOVERY I (L1,LG)	3.9 V8	134	09.03				R	07.B315.28	
FREELANDER 2 (FA_)	3.2, 2.2TD4	112 - 171	10.06				R	07.B315.04	
RANGE ROVER I	3.5 V8	97	07.70	10.85			R	07.B315.28	
RANGE ROVER III (LM)	4.2, 4.4, 3.0 TD6, 3.6 TD8	210 - 291	03.02				R	07.B315.01	
RANGE ROVER EVOQUE	2.0, 2.2, 2.2TDI	110 - 177	01.11				R	07.B315.34	
LOTUS									
ELISE, ELISE 340R, EXIGE	1.8 16V, 111S, 340R, 1.8 Cup240	88 - 130	08.95		F	07.B315.27	R	07.B315.06	
ELISE, EXIGE - AP BB KIT	1.8 16V, 111S, 340R, 1.8 Cup240	88 - 130	08.95		F	07.B315.32	R	07.B315.06	
ESPRIT S4 (082)	2.2, 2.2 Turbo, 2.0GT3, 3.5V8 Turbo	158 - 260	09.00	07.96			R	07.B315.06	
MASERATI									
GHIBLI II	2.0 BiTurbo, 2.8 BiTurbo	209 - 225	05.92				R	07.B315.01	
GT	3200 & 4200				F	07.B314.36	R	07.B314.13	
QUATTROPORTE II	2.0 BiTurbo, 2.8 BiTurbo, 3.5V8	211 - 247	03.94				R	07.B315.01	
MAZDA									
2 (DY)	1.25, 1.3, 1.4, 1.5, 1.6, 1.4CD	50 - 74	04.03		F	07.B314.43			
3			00.03		F	07.B314.42			
3 MPS			06.06	09.09	F	07.B314.31			
323 F V (BA)	2.0 24V	106	08.94	09.98			R	07.B315.07	
MX-5 I (NA)	1.6, 1.8	85 - 96	02.94		F	07.B314.60	R	07.B315.07	F narrow annulus
MX-5 I (NA)	1.6, 1.8	85 - 96	02.94	04.98	F	07.B314.06	R	07.B315.07	
MX-5 II (NB)	1.6, 1.8, 1.9 16V	81 . 107	01.98	10.05	F	07.B314.06	R	07.B315.07	
MX-5 II	1.8, 1.9	81 107	08.00	10.05	F	07.B314.07	R	07.B315.08	
MX-5 III	1.8, 1.9						R	07.B315.31	
RX8 (SE17)	2.6 Wankel	141 - 177	10.03		F	07.B314.08	R	07.B315.09	

The data contained in this catalogue are provided for information purposes only and therefore may be subject to change.

		kW	31		F - Part Number		R - Part Number		
MG									
ZT & ZT-T	160, 180, 190, 260, 1.8, 1.8T, 2.0CDTi	85 - 191	06.01					07.B315.26	
MINI									
MINI I (R50,R53)	ONE, ONE D, COOPER , 1.4, 1.6 S	55 - 147	06.01	10.06	F	07.B314.46	R	07.B315.10	
MINI I (R50,R53)	ONE, ONE D, COOPER S, COOPER D	55 - 147	06.01	10.06	F	07.B314.47	R	07.B315.10	not JCW kit
MINI II (R55, R57)	Cooper D	82	03.10		F	07.B314.74	R	07.B315.33	with sports suspension
MINI II (R55, R57,58,59)	John Cooper Works	155	03.08		F	07.B314.74	R	07.B315.33	
MINI II (R56)	ONE, COOPER, COOPER S, COOPER D	55 - 147	10.06		F	07.B314.47	R	07.B315.33	not JCW kit
MINI COUNTRYMAN (R55)	ONE, COOPER, COOPER S, COOPER D	66 - 160	06.10		F	07.B314.47	R	07.B315.33	
MITSUBISHI									
GALANT VI	2.0, 2.5V6, 2.0TDI, 2.4GDI	66 - 120	02.99	10.04	F	07.B314.09			
LANCER (CS_A)	1.3, 1.6, 2.0,	72 - 99	09.03		F	07.B314.09			
LANCER (CY/Z_A)	1.5, 1.8, 2.0 DI-D	80 - 105	06.08		F	07.B314.09			
LANCER	EVO V, VI, VII, VIII, IX				F	07.B314.48	R	07.B315.27	
EVO X LANCER	EVO X	217			F	07.B314.48	R	07.B315.11	
SPACE RUNNER	2.0, 2.4GDI	100 - 110	05.00		F	07.B314.09			
NISSAN									
200 ZX (S14)	2.0 16V		10.93	12.99	F	07.B314.10	R	07.B315.12	
300 ZX (Z32)	3.0 Twin turbo	197 - 224	05.90	12.97	F	07.B314.10	R	07.B315.19	
350 Z (Z33)	3.5	206 - 230	10.03		F	07.B314.49	R	07.B315.27	
370 Z (Z34)	3.7	241 - 243	06.09		F	07.B314.75	R	07.B315.40	
BLUEBIRD (T72,T12)	1.8i 16V	95	02.89	12.90			R	07.B315.12	
MAXIMA (J30)	3.0i	125	10.88	06.94			R	07.B315.12	
NOTE (E11)	1.4, 1.6, 1.5CDi	50 - 81	03.06				R	07.B315.25	
R32 GTR			00.89	00.93	F	07.B314.10	R	07.B315.19	Akibono brakes
R35 GTR	3.8 V6	357 - 390	02.09				R	07.B314.30	
SKYLINE	R32, R33GTR		92.02		F	07.B314.49	R	07.B315.27	Brembo brakes
OPEL									
ASCONA B	1.2, 1.6, 1.9, 2,0	40 - 74	09.75	08.81	F	07.B315.27			
ASTRA G (F70)	1.6, 1.8, 2.0, 2.2, 2.0DI, 1.7TD, 2.2TDI	55 - 108	01.99	10.05	F	07.B315.26	R	07.B314.21	
CORSA	VXR Nurburgring	155	06.11		F	07.B314.21			
ASTRA H	1.2, 1.4, 1.6, 1.8, 1.6&2.0Turbo, 1.3,1.7&1.9 1.7CTDi	48 - 147	03.04		F	07.B314.26	R	07.B315.21	
CORSA C & D	1.6 Turbo, 1.7CDTi	74 - 141	06.03		F	07.B314.26			
CORSA D	1.3CDTi	66	07.06		F	07.B314.40			only for 284mm disc
KADETT	1.6, 1.9, 2.0	55 - 85	05.77	07.79	F	07.B315.27			
INSIGNIA	VXR 2.8V6	239	07.08		F	07.B314.48			
MANTA A & B (58_,59_)	1.2, 1.6, 1.9GT/E, 2.0	44 - 81	09.74	08.78	F	07.B315.27			
MERVIA A & B	1.4, 1.6, 1.8, 1.6Turbo, 1.3CTDI, 1.7CTDI	51 - 132	05.03		F	07.B314.26	R	07.B315.21	
REKORD E	1.7, 1.9, 2.0, 2.0D, 2.1D, 2.2D	44 - 81	09.77	04.81	F	07.B315.27			
SPEEDSTER	2.0, 2.2, 2.0 Turbo	108 - 162	09.00		F	07.B315.27	R	07.B315.06	

The data contained in this catalogue are provided for information purposes only and therefore may be subject to change.

		kW	31		F - Part Number		R - Part Number		
VECTRA C	2.8 V6 Turbo	184 - 206	08.05		F	07.B314.55			
ZAFIRA	1.6, 1.8, 2.0,2.2, 1.6CNG, 1.7 & 1.9CDTi	77 - 147	04.99	06.05	F	07.B314.26	R	07.B315.21	
PEUGEOT									
106 I & II	1.3, 1.4, 1.6, 1.4D, 1.5D	51 - 87	08.91				R	07.B315.37	
205	1.7 Diesel	44	03.94		F	07.B314.37			
205 I & II	1.9 GTI, 1.9CTI	75 - 94	10.86	09.98			R	07.B315.13	
206 (2A/C)	1.6 16V, 2.0, 1.6HDi, 2.0 Hdi, 1.9D	80 - 100	09.98		F	07.B314.38	R	07.B315.13	
206 (2A/C)	2.0 RC	130	07.03		F	07.B314.11	R	07.B315.13	
207 (WA_,WC_)	1.6, 1.6 Turbo, S16, 1.9D, 1.6HDi, 2.0HDi	66 - 110	02.07		F	07.B314.11			
207 (WA_,WC_)	1.4, 1.4HDi	53 - 80	02.06		F	07.B314.38			
207 (WA_,WC_)	1.4 16V, 1.6HDi	70 - 80	06.07		F	07.B314.40			
306 (7B, N3, N5)	1.1, 1.4, 1.6, 1.8, 2.0, 1.8D, 1.9D, 2.0HDi	44 - 110	06.94	05.01	F	07.B314.37	R	07.B315.13	
307 (3A/C)	1.4, 1.4 16V, 1.4HDi	50 - 65	08.00		F	07.B314.38	R	07.B315.25	not ESP
307 (3A/C)	1.6, 2.0, 1.6 & 2.0HDi	65 - 100	08.00		F	07.B314.11	R	07.B315.25	
308 (4A_,4C_)	1.4, 1.6, 2.0, 1.9GTI, 1.6 & 2.0 HDI	70 - 116	09.07				R	07.B315.25	
309 I & II	1.9, 1.9GTI	72 - 116	03.86	12.93			R	07.B315.13	
405 I & II	1.8, 1.9, 2.0, 1.8TD	66 - 144	03.88	10.96			R	07.B315.25	
807 (E)	2.0, 2.2, 2.0 & 2.2HDI	79 - 125	06.02				R	07.B315.25	
1007 (KM_)	1.6 16V, 1.6HDi	80	04.05				R	07.B315.25	
BIPPER (AA_)	1.4, 1.4HDi	50 - 54	02.08		F	07.B314.04			
PARTNER BOX	1.6, 1.6, 2.0HDi	50 - 66	02.00				R	07.B315.25	with ESP
PORSCHE									
911 (964)	3.3 Turbo & S, 3.6 Carrera RS	191 - 261	08.90	06.91	F	07.B314.12	R	07.B314.13	
911 (964)	3.6 Carrera & Carrera 4	184	12.88	09.93	F	07.B314.13	R	07.B314.13	
911 (964)	3.3 & 3.6 Turbo, 3.3 Turbo S	235 - 265	07.91	09.93	F	07.B314.14	R	07.B314.13	
911 (993)	3.6&3.8 Carrera & Carrera 4	200 - 210	10.93	09.97	F	07.B314.12	R	07.B314.13	
911 (993)	3.6 Turbo & 4 &GT2 & GT2 4, Carrera RS&4	221 - 331	03.95	09.97	F	07.B314.14	R	07.B314.12	
911 (996)	3.4&3.6 Carrera&4, 3.6 Carrera S&4S	221 - 254	09.07	08.05	F	07.B314.15	R	07.B315.14	r disc dia 299mm
911 (996)	3.4&3.6 Carrera&4, 3.6 Carrera S&4S	221 - 254	09.07	08.05	F	07.B314.15	R	07.B314.15	r disc dia 330mm
911 (996)	3.6 GT3, 3.6S, 3.6 Turbo 4 & Turbo 4S	265 - 331	03.03	08.05	F	07.B314.16	R	07.B314.15	
911 (996)	3.6 GT2, 3.6 GT3, 3.6 GT3 RS	280 - 355	03.03	08.05	F	07.B314.17	R	07.B314.15	
911 (997)	3.6 & 3.8 Carrera S, 3.6 & 3.8 Carrera 4	261 - 283	07.04		F	07.B314.16	R	07.B315.14	
911 (997)	3.8 Carrera 4S	280	08.05		F	07.B314.16	R	07.B314.15	
911 (997)	3.8 Turbo, GT2, 3.8 GT3 & GT3 RS	320 - 368	03.06		F	07.B314.17	R	07.B315.15	
928	4.95, 5.0GT, 5.0S4	212 - 243	09.85	11.95	F	07.B314.12	R	07.B314.13	
928	5.4 GTS	257	08.91	11.95	F	07.B314.14	R	07.B314.13	
944	All models	155 - 184	08.85	07.91	F	07.B314.13	R	07.B314.13	
968	3.0	176	06.91	11.95	F	07.B314.12	R	07.B314.13	with sport suspension
968	3.0	176	06.91	11.95	F	07.B314.13	R	07.B314.13	
968	3.0 Turbo S	224	03.93	11.95	F	07.B314.14	R	07.B314.13	
BOXSTER (986)	2.5, 2.7	150 - 168	06.96	11.04	F	07.B314.18	R	07.B315.14	

The data contained in this catalogue are provided for information purposes only and therefore may be subject to change.

		kW	31		F - Part Number		R - Part Number		
BOXSTER (986)	S 3.2	185 - 196	08.99	11.04	F	07.B314.15	R	07.B315.14	
BOXSTER (987)	S 3.2, S 3.4	206 - 217	11.04		F	07.B314.15	R	07.B315.14	
BOXSTER (987)	2.7	176 - 180	11.04		F	07.B314.18	R	07.B315.14	
CAYENNE (955)	TURBO S 4.5 & 4.8	368 - 404	01.04		F	07.B314.19			
CAYENNE (955)	3.2, 3.6, S4.5, S4.8, Turbo 4.5	184 - 331	10.03		F	07.B314.20	R	07.B314.16	
CAYMAN	2.5, 2.7	180	07.06		F	07.B314.18	R	07.B315.14	
CAYMAN	S 3.2, S 3.4	217	11.05		F	07.B314.15	R	07.B315.14	
RENAULT									
9 (L42)	1.4 Turbo	77 - 85	04.84	12.89			R	07.B315.13	
11 (B/C37_)	1.4 Turbo	77 - 85	04.84	12.88			R	07.B315.13	
19 I (B/C53_)	1.2, 1.4, 1.7, 1.9D, 1.9DT	40 - 79	01.88	12.92			R	07.B315.13	
19 II ((L53_)	1.1, 1.2, 1.4, 1.7, 1.8, 1.9D, 1.9DT	40 - 79	01.92	12.95			R	07.B315.13	
21 (B48_)	2.0, 2.2, 2.1D, 2.1TD	50 - 100	07.89	06.94			R	07.B315.06	
25 (B29_)	2.2, 2.8, 2.8i, 2.4Turbo, 2.5Turbo,	79 - 151	04.84	02.90	F	07.B314.50			
AVANTIME (DE0_)	2.0Turbo, 3.0, 2.2dCi	110 - 152	09.01	05.03			R	07.B315.25	
CLIO GRANDTOUR	1.2, 1.6, 1.5dCi	55 - 82	02.08				R	07.B315.25	
CLIO I (B/C57_<5/357_)	1.2, 1.4, 1.8, 1.9D	40 - 79	01.91	09.98			R	07.B315.13	
CLIO II (BB0/1/2_, CB0/1/2_)	1.2, 1.4, 1.7, 1.8, 1.5D, 1.9D, 1.5cDi	55 - 132	09.98	06.05			R	07.B315.13	
CLIO II	Sport 172, Sport 182	172 -182			F	07.B314.50	R	07.B315.13	
CLIO III (BR0/1,CR0/1)	1.2, 1.4, 1.6, 2.0, 1.5D, 1.5cDi	55 - 145	06.05				R	07.B315.25	
CLIO III	Sport 192, Sport 200	192 - 200			F	07.B314.21	R	07.B315.25	
ESPACE II (J/S63_)	2.8 V6	110	01.91	10.96	F	07.B314.50			
ESPACE III (JE0_)	2.0, 3.0, 1.9dTI, 2.2TD, 2.2 dTi	72 - 140	11.96	10.00			R	07.B315.06	
ESPACE III (JE0_)	2.0, 3.0, 1.9dTI, 2.2TD, 2.2 dTi	72 - 140	11.96	10.00			R	07.B315.25	
FLUENCE	1.6, 2.0, 1.5dCi	66 - 103	02.10				R	07.B315.25	
GRAND SCENIC II (JM0/1_)	1.6, 2.0, 1.5, 1.9dCi, 2.0dCi	78 - 118	02.09				R	07.B315.25	
GRAND SCENIC III (JZ0/1_)	1.4, 1.6, 2.0, 1.5, 1.9dCi, 2.0dCi	78 - 118	02.09				R	07.B315.25	
LAGUNA (B56_,556_)	1,6, 1,8, 2.0,3.0, 2.2D, 2.2dT, 2.0dTi	61 - 140	11.93	04.99	F	07.B314.50	R	07.B315.06	
MEGANE I (BA0/1_)	1.4, 1.6, 1.8, 2.0, 1.9dTi, 1.9DCi	60 - 108	07.96				R	07.B315.13	
MEGANE COACH (DA0/1_)	2.0, 1.9dTi, 1.9 Dci	75 - 108	03.96	02.01	F	07.B314.50			
MEGANE II(BM0/1_,CM0/1_)	1.4, 1.6, 2.0, 2.0Turbo, 1.5dCi,1.9dCi, 2.0dCi	60 - 120	11.02	01.07			R	07.B315.25	
MEGANE II(BM0/1_,CM0/1_)	2.0 Renault Sport	165	05.04		F	07.B314.21			
MEGANE III	1.4, 1.6, 2.0, 1.5dCi, 1.9dCi, 2.0dCi	68 - 132	11.08				R	07.B315.25	
MEGANE III	Sport RS 250				F	07.B314.48	R	07.B315.25	
MEGANE SCENIC(JA0/1_)	1.4, 1.6, 2.0, 1.9D, 1.9dT	55 - 84	01.97	09.99	F	07.B314.50			
MODUS (F/JP0_)	1.2, 1.4, 1.6, 1.5dCi	48 - 82	12.04				R	07.B315.25	
SAFRANE I (B54_)	2.0, 2.2, 3.0, 2.1dT, 2.5dT	77 - 193	11.92	07.96	F	07.B314.50	R	07.B315.06	
SAFRANE II (B54_)	2.0, 2.5, 2.9, 3.0, 2.2dT	83 - 140	07.96	12.00	F	07.B314.50	R	07.B315.06	
SCENIC I (JA0/1_)	1.4, 1.6, 2.0, 1.5, 1.9dCi, 2.0dCi	70 - 103	09.99	08.03			R	07.B315.25	
SCENIC II (JM0/1_)	1.4, 1.6, 2.0, 1.9D, 1.5cDi, 1.9dCi, 2.0dCi	74 - 120	06.03				R	07.B315.25	
SCENIC III (JZ0/1_)	1.4, 1.6, 2.0, 1.5dCi, 1.9dCi, 2.0dCi	78 - 118	02.09				R	07.B315.25	
SPORT SPIDER	2.0	108 - 110	03.95	10.99	F	07.B314.50			
SUPER 5 & THALIA	1.4 TURBO, 1.7, 2.0	88 - 118	10.86	03.95			R	07.B315.13	

The data contained in this catalogue are provided for information purposes only and therefore may be subject to change.

		kW	31		F - Part Number		R - Part Number		
TWINGO (CN0_)	1.6 RS	98	05.08				R	07.B315.25	
ROLLS-ROYCE									
PHANTOM	6.75	338	05.03				R	07.B315.02	
ROVER									
25	1.1, 1.4, 1.8, 2.0iDT	44 - 107	10.99	05.04			R	07.B315.05	
75	1.8, 1.8T, 2.0, 2.5, 2.0CDT, 2.0CTDi	85 - 130	02.99				R	07.B315.26	
600	1.8, 2.0, 2.3	77 - 147	08.93	02.99	F	07.B314.44			
SAAB									
9-5 (YS3E)	2.0, 2.3, 2.3 TURBO, 1.9TiD, 3.0TiD	88 - 191	09.97				R	07.B315.26	
SEAT									
ALHAMBRA (7V8,7V9)	2.0, 1.8T, 1.9TDI, 2.0TDI	66 - 110	04.96				R	07.B315.25	
ALTEA (5P1)	1.4TSI, 1.8TSI, 2.0FSI, 2.0TFSI, 2.0TDI	92 - 147	03.04		F	07.B314.52	R	07.B315.25	
ALTEA (5P1)	1.4, 1.6, 1.2TSI, 1.6TDI, 1.9TDI	63 - 75	03.04		F	07.B314.53	R	07.B315.25	
ALTEA (5P5, 5P8)	1.4TSI, 1.8TSI, 2.0FSI, 2.0TFSI, 2.0TDI	92 - 147	10.06		F	07.B314.52	R	07.B315.25	
ALTEA (5P5, 5P8)	1.4, 1.6, 1.2TSI, 1.6TDI, 1.9TDI	63 - 75	03.04		F	07.B314.53	R	07.B315.25	
CORDOBA (6K2/C2)	1.8, 2.0, 1.9TDI	66 - 110	02.93	06.99			R	07.B315.25	
CORDOBA (6L2)	1.2, 1.4, 1.6, 1.4TDI, 1.9TDI, 1.9SDI	51 - 96	09.02		F	07.B314.53	R	07.B315.25	
CORDOBA (6L2)	2.0, 1.9TDI	85 - 96	09.02		F	07.B314.56	R	07.B315.25	
EXEO (3R2)	1.6, 1.8T, 2.0TDI, 2.0TFSI	75 - 147	12.08		F	07.B314.54	R	07.B315.25	
EXEO (3R2)	1.6, 1.8T, 2.0TDI, 2.0TFSI	75 - 147	12.08		F	07.B314.55	R	07.B315.25	
EXEO ST (3R5)	1.6, 1.8T, 2.0TDI, 2.0TFSI	75 - 147	06.09		F	07.B314.55	R	07.B315.25	
IBIZA II (6K1)	1.8, 2.0, 1.9TDI	66 - 95	11.93	08.99			R	07.B315.25	
IBIZA III (6K1)	1.0, 1.4, 1.6, 1.8T, 1.9SDI, 1.4TDI, 1.9TDI	37 - 81	08.99	02.02			R	07.B315.25	
IBIZA IV (6L1)	1.2, 1.4, 1.6, 2.0, 1.8T, 1.4TDI, 1.9TDI	47 - 110	02.02		F	07.B314.53	R	07.B315.25	
IBIZA IV (6L1)	1.9TDI Cupra R	118	03.04	02.08	F	07.B314.54 or .70*	R	07.B315.25	*different wear indicators
IBIZA IV (6L1)	1.4, 1.6, 2.0, 1.8T, 2.0T, 1.9TDI	55 - 110	02.02		F	07.B314.56	R	07.B315.25	
IBIZA V (6J5)	1.2, 1.4, 1.6, 2.0, 1.4TDI, 1.9TDI	51 - 110	03.08		F	07.B314.53	R	07.B315.25	
IBIZA V (6J5)	1.4TSI, 2.0TDI	105 - 110	06.09		F	07.B314.52	R	07.B315.25	
LEON (1M1)	1.8i Turbo Cupra R	165			F	07.B314.03			
LEON (1M1)	2.8 Cupra 4	150	02.01	06.06	F	07.B314.39	R	07.B315.25	
LEON (1M1)	1.4, 1.6, 1.8, 2.8, 1.9SDI, 1.9TDI	74 - 150	11.99	06.06	F	07.B314.53	R	07.B315.25	
LEON (1M1)	1.4, 1.6, 1.8, 2.8, 1.9SDI, 1.9TDI	74 - 150	11.99	06.06	F	07.B314.54 or .70*	R	07.B315.25	*different wear indicators
LEON (1P1)	1.4, 1.8&2.0TSI, 2.0 FSI, 2.0TDI	92 - 155	06.06		F	07.B314.52	R	07.B315.25	Changes by R disc Ø ref note 1
LEON (1P1)	1.4, 1.8&2.0TSI, 2.0 FSI, 2.0TDI	92 - 155	06.06		F	07.B314.52	R	07.B315.22	Changes by R disc Ø ref note 1
LEON (1P1)	1.2,TSFI, 1.4, 1.6, 1.9TDI	66 - 195	06.06		F	07.B314.53	R	07.B315.25	
LEON (1P1)	1.4, 1.8&2.0TSI, 2.0 FSI, 2.0TDI	92 - 155	06.06		F	07.B314.52	R	07.B315.22	
LEON (1P1)	2.0 TSFI	177 - 195	11.06		F	07.B314.55	R	07.B315.25	
LEON (1P1)	1.4, 1.8&2.0TSI, 2.0 FSI, 2.0TDI	92 - 155	06.06		F	07.B314.52	R	07.B315.22	
Mii (KF1)	1.0	44 - 55	10.11		F	07.B314.53			
TOLEDO I (1L)	1.8, 2.0, 1.9TDI	85 - 110	05.91	03.99			R	07.B315.25	
TOLEDO II (1M2)	1.6, 1.8, 1.9SDI, 1.9TDI	50 - 92	04.99	05.06	F	07.B314.53	R	07.B315.25	

The data contained in this catalogue are provided for information purposes only and therefore may be subject to change.

		kW	31		F - Part Number		R - Part Number		
TOLEDO II (1M2)	1.8 4x4, 2.3, 2.8, 1.9TDI	96 - 165	04.99	05.06	F	07.B314.54 or .70*	R	07.B315.25	*different wear indicators
TOLEDO III (5P2)	1.8&2.0TSFI, 2.0TDI	110 - 147	05.06	05.09	F	07.B314.52	R	07.B315.25	
TOLEDO III (5P2)	1.6, 1.9TDI	75 - 77	10.04	05.09	F	07.B314.53	R	07.B315.25	
SKODA									
CITIGO	1.0	44 - 55	10.11		F	07.B314.53			
FABIA	1.2, 1.4, 1.6, 1.4, 1.6&1.9TDI	44 - 77	01.07	12.99	F	07.B314.56	R	07.B315.25	
FABIA (6Y2)	1.2, 1.4, 1.6, 1.4, 1.6&1.9TDI, 1.9SDI	47 - 74	12.99	03.08	F	07.B314.53	R	07.B315.25	
FABIA (6Y2)	2.0, 1.9TDI RS	85 - 96	12.99	05.09	F	07.B314.56	R	07.B315.25	
FABIA	1.4TSI VRS	132	05.10		F	07.B314.52	R	07.B315.25	
OCTAVIA (1U2)	1.4, 1.6, 1.8, 2.0, 1.9SDI, 1.9TDI	50 - 92	09.96		F	07.B314.53	R	07.B315.25	
OCTAVIA (1U2)	1.8T, RS1.8T, 1.9TDI	50 - 92	10.96		F	07.B314.54 or .70*	R	07.B315.25	*different wear indicators
OCTAVIA (1Z3)	1.8&2.0TSI, 2.0FS1, 2.0TDI	100 - 147	02.04		F	07.B314.52	R	07.B315.22	
OCTAVIA (1Z3)	1.4, 1.6, 1.4&1.6TSI, 1.6&2.0FSI, 1.6&2.0TDI	55 - 118	02.04		F	07.B314.53	R	07.B315.25	Changes by R disc Ø ref note 1
OCTAVIA (1Z3)	1.4, 1.6, 1.4&1.6TSI, 1.6&2.0FSI, 1.6&2.0TDI	55 - 118	02.04		F	07.B314.53	R	07.B315.22	Changes by R disc Ø ref note 1
RAPID	1.2TSI, 1.4TSI, 1.6TDI	70 - 90	10.12		F	07.B314.52			
ROOMSTER (5J)	1.2, 1.4	43 - 63	07.06		F	07.B314.53	R	07.B315.25	dia 256mm disc
ROOMSTER (5J)	1.2, 1.4	51 - 77	07.06		F	07.B314.56	R	07.B315.25	dia 288mm disc
ROOMSTER	1.2, 1.6TDI	55 - 65	03.10		F	07.B314.54	R	07.B315.25	
ROOMSTER PRAKTIC	1.2, 1.4	51 - 63	03.07	03.10	F	07.B314.53	R	07.B315.25	
ROOMSTER PRAKTIC	1.4TDI	51 - 59	03.07	03.10	F	07.B314.54	R	07.B315.25	
ROOMSTER PRAKTIC	1.2, 1.6TDI	55 - 65	03.10		F	07.B314.54	R	07.B315.25	
SUPERB (3T4)	1.4&1.8 TSI, 1.6, 1.9&2.0 TDI	92 - 105	11.08		F	07.B314.52	R	07.B315.22	
SUPERB (3T4)	3.6 V6	191	11.08		F	07.B314.55	R	07.B315.22	
SUPERB (3U4)	2.0, 1.8T, 1.9, 2.0&2.5TDI, 2.8V6	85 - 142	02.02	03.08	F	07.B314.54	R	07.B315.25	
YETI	1.2&1.8TSI, 2.0TDI	77 - 125	05.09		F	07.B314.52	R	07.B315.22	
YETI	1.2&1.8TSI, 2.0TDI	77 - 125	05.09		F	07.B314.52	R	07.B315.25	
SUBARU									
FORESTER (SF)	2.0, 2.0 TURBO	90 - 160	07.97	09.02	F	07.B314.23	R	07.B315.17	
FORESTER (SG)	2.0, 2.5, 2.0 TURBO	116 - 169	09.02				R	07.B315.17	
IMPREZA (GFC)	2.0 Turbo	155	12.96	01.97	F	07.B314.22	R	07.B315.18	
IMPREZA (GFC)	2.0 Turbo	155	01.97	12.00	F	07.B314.23	R	07.B315.18	
IMPREZA (GFC)	2.0	85 - 92	01.99	12.00			R	07.B315.17	
IMPREZA (GFC)	1.6, 2.0, 2.0 Turbo	85 - 155	12.95	12.00			R	07.B315.18	
IMPREZA (46V,47S)	STI 2.0 & 2.5	195	01.02		F	07.B314.51	R	07.B315.27	
IMPREZA	WRX 2.0, WRX 2.5				F	07.B314.10	R	07.B315.19	
LEGACY I (BC)	2.0 Turbo & Turbo S AWD	147	05.92	07.94	F	07.B314.22	R	07.B315.18	
LEGACY I (BC)	1.8, 1.8 4x4, 2.0 AWD, 2.2 AWD	76 - 100	01.89	07.94			R	07.B315.18	
LEGACY II (BD,BG)	2.5i AWD	110	06.96	03.99	F	07.B314.23	R	07.B315.18	
LEGACY II (BD,BG)	2.0i, 1.8, 2.0&2.2 AWD	76 - 94	09.94	03.99			R	07.B315.18	
LEGACY III (BE,BH)	2.0, 2.5	92 - 115	10.98	07.00	F	07.B314.23	R	07.B315.18	
LEGACY III (BE,BH)	2.0, 2.5, 2.0 4X4, 3.0 AWD	92 - 154	08.00	08.03	F	07.B314.23	R	07.B315.17	
LEGACY IV	2.0, 2.5, 2.5i	121 - 140	06.05				R	07.B315.17	

The data contained in this catalogue are provided for information purposes only and therefore may be subject to change.

		kW	31		F - Part Number		R - Part Number		
OUTBACK (BE,BH)	2.5, 3.0, 2.0D	115 - 154	10.00	08.03	F	07.B314.23	R	07.B315.17	
SVX	3.3i 4WD	169	09.92	12.97			R	07.B315.18	
SUZUKI									
IGNIS (FH)	1.3	61	10.00	09.03			R	07.B315.09	
TOYOTA									
AVENSIS (_T22_)	1.6, 1.8, 2.0, 2.0VVT, 2.0D, 2.0TD	66 - 110	01.00	07.01	F	07.B314.24			
CARINA E (_T19_)	2.0GTi	116 - 129	04.92	09.97	F	07.B314.24			
TOYOTA									
LAND CRIUSER (J20)	4.7 V8, 4.5 D	195 - 212	01.08		F	07.B314.25	R	07.B315.20	
MR 2 (_W2_)	2.0	88 - 125	12.91	05.00	F	07.B314.24			
HI-LUX					F	07.B314.10	R	07.B315.20	with Sumitomo caliper
VAUXHALL									
ASTRA Mk IV	1.2, 1.4, 1.6, 1.7TD, 1.7CTDI	48 - 74	09.98	05.05			R	07.B315.21	
ASTRA Mk IV	1.8, 2.0, 2.2, 2.0DI, 2.0DTI	85 - 108	09.98	05.05	F	07.B314.26	R	07.B315.21	
ASTRA V	1.4, 1.6, 1.8, 2.0Turbo, 1.7TD, 1.3CDTI, 1.9CDTI	74 - 147	08.04		F	07.B314.26	R	07.B315.21	
CAVALIER Coupe	1.9S, 2.0S	66 - 74	10.75	08.78	F	07.B314.27			
COMBO	1.4, 1.6, 1.3CDTI, 1.7CDTI	48 - 74	08.04		F	07.B314.26	R	07.B315.21	high payload
COMBO	1.4, 1.6, 1.3CDTI, 1.7CDTI	48 - 74	08.04				R	07.B315.21	
CORSA	1.6 SRI, 1.6 Turbo	74 - 141	02.07		F	07.B314.26			
CORSA	1.3CDTI	66	07.06		F	07.B314.40			only for 284mm disc
MERVIA	1.4, 1.6, 1.8, 1.6Turbo, 1.3CDTI, 1.7CDTI	55 - 132	05.03	08.05			R	07.B315.21	
SPEEDSTER	2.0	162	10.03	09.06	F	07.B315.27	R	07.B315.06	
VECTRA	2.8 V6 Turbo	188	08.05	07.08	F	07.B314.55			
VX220	2.2, 2.0 Turbo	108 - 147	09.00		F	07.B315.27	R	07.B315.06	
ZAFIRA	1.6, 1.8, 2.2, 2.0Turbo, 2.2D, 2.0DI, 2.0DTI	60 - 147	04.99	06.05	F	07.B314.26	R	07.B315.21	
ZAFIRA Mk II	1.6, 1.8, 2.2, 1.7CDTI, 1.9CDTI	81 - 110	07.05		F	07.B314.26	R	07.B315.21	
VOLVO									
C30	D5, T5	80 - 162	10.06		F	07.B314.41			
C70 I	2.0, 2.5, 2.0T, 2.3T, 2.4T, 2.5T	120 - 180	03.97	10.05	F	07.B314.54			
C70 II	2.4, T5, 2.0D, D5	103 - 169	03.06		F	07.B314.41			
S40 II (MS)	1.6, 1.8, 2.0, 2.4, T5, 1.6D, 2.0D	74 - 169	01.04		F	07.B314.41			
S60	R 2.5T AWD	221	03.03		F	07.B314.48	R	07.B314.39	
S60	All models	84 - 224	01.10				R	07.B314.34	with electronic handbrake
S70 (P80_)	2.0, 2.3, 2.4, 2.5, 2.0T, 2.5T, 2.3T5, 2.5TDI	93 - 184	01.97	11.00	F	07.B314.54			
S80	All models	80 - 224	01.06				R	07.B314.34	with electronic handbrake
V50 (MW)	1.6, 1.8, 2.0, 2.4, T5, 1.6D, 2.0D, 2.4Tdi	74 - 169	04.04		F	07.B314.41			
V60	All models	84 - 224	01.10				R	07.B314.34	with electronic handbrake
V70 I ESTATE (P80_)	2.0, 2.4, 2.5, 2.0T, 2.3T, 2.5TDI	93 - 195	01.97	03.00	F	07.B314.54			
V70 II ESTATE (P80_)	2.5T, 2.5R	147 - 221	12.02		F	07.B314.48	R	07.B314.39	
V70 III	All models	84 - 224	01.10				R	07.B314.34	with electronic handbrake

The data contained in this catalogue are provided for information purposes only and therefore may be subject to change.

		kW	31		F - Part Number		R - Part Number		
XC-60	All models	120 - 224	01.08				R	07.B314.34	with electronic handbrake
XC-70	All models	120 - 224	01.07				R	07.B314.34	with electronic handbrake
VW									
BORA (1J2)	1.4, 1.6, 1.8, 2.0, 1.6FSI, 1.9SDI, 1.9TDI	50 - 92	10.98	05.05	F	07.B314.53	R	07.B315.25	
BORA (1J2)	1.8 &2.0 4WD, 2.3, 2.8, 1.8T, 1.9TDI	110 - 150	10.98	05.05	F	07.B314.54 or .70*	R	07.B315.25	*different wear indicators
CADDY III	1.4, 1.6, 2.0, 2.0SDI, 1.9TDI, 2.0TDI	51 - 103	03.04		F	07.B314.52	R	07.B315.22	
CADDY III	1.4, 1.6, 2.0, 1.9&2.0TDI	51 - 103	03.04		F	07.B314.53	R	07.B315.22	
CORRADO (531)	1.8, 2.0, 2.9	85 - 140	09.88	12.95			R	07.B315.25	
EOS (1F7)	1.4TSI, 1.6&2.0FSI, 3.2, 3.6, 2.0TDI	90 - 184	03.06		F	07.B314.52	R	07.B315.22	
FOX (5Z1)	1.0, 1.2, 1.6, 1.9D, 1.4TDI	47 - 76	10.03		F	07.B314.53			
GOLF II (19E, 1G1)	1.8, 1.8GTI	62 - 118	08.04	10.91			R	07.B315.25	
GOLF III (1H1)	2.0, 2.8, 2.9, 1.9TDI	81 - 140	01.92	08.97	F	07.B314.54 or .70*	R	07.B315.25	*different wear indicators
GOLF III (1H1)	1.6, 1.8, 2.0	66 - 79	11.91	08.97			R	07.B315.25	
GOLF IV (1J1)	1.6, 1.8, 2.0, 1.8T, 1.6FSI, 1.9SDI, 1.9TDI	68 - 92	08.97	06.05	F	07.B314.53	R	07.B315.25	
GOLF IV (1J1)	1.8T, 2.3, 2.8, 1.9TDI	96 - 150	08.97	06.05	F	07.B314.54 or .70*	R	07.B315.25	*different wear indicators
GOLF PLUS (5M1, 521)	1.4TSI, 2.0FSI, 2.0TDI	85 - 125	05.05	10.03	F	07.B314.52	R	07.B315.22	
GOLF PLUS (5M1, 521)	1.0, 1.4, 1.6, 1.8, 1.4, 1.6&2.0FSI, 1.9TDI	47 - 85	01.05	10.03	F	07.B314.53	R	07.B315.22	
GOLF V (1K1)	1.0, 1.6, 1.8, 2.0, 3.2, 1.9TDI	47 - 90	10.03	10.08	F	07.B314.53	R	07.B315.25	
GOLF V (1K1)	1.6, 1.8, 2.0, 1.4, 1.6&2.0FSI, 2.0GTI, 1.9&2.0TDI, GTI	73 - 147	10.03	10.08	F	07.B314.52	R	07.B315.22	
GOLF V (1K1)	2.0GTI, 3.2, 3.2R32, 2.0TDI	125 -184	01.04	10.08	F	07.B314.55	R	07.B315.22	
GOLF VI (5K1)	1.4, 1.6, 1.8, 2.0, 1.4, 1.6&2.0FSI, 2.0TDI, GTI	74 - 147	10.08		F	07.B314.52	R	07.B315.25	Changes by R disc Ø ref note 1
GOLF VI (5K1)	1.4, 1.6, 1.8, 2.0, 1.4, 1.6&2.0FSI	74 - 147	10.08		F	07.B314.52	R	07.B315.22	Changes by R disc Ø ref note 1
GOLF VI (5K1)	1.4, 1.6, 1.8, 2.0, 1.4, 1.6&2.0FSI	74 - 147	10.08		F	07.B314.53	R	07.B315.22	
GOLF VI (5K1)	2.0 R 4motion	199	11.09		F	07.B314.55	R	07.B315.22	
JETTA II (19E, 1G2)	1.8	62 - 102	01.84	10.91			R	07.B315.25	
JETTA III (1K2)	1.6, 1.6TDI, 1.9TDI	75 - 77	08.05		F	07.B314.53	R	07.B315.22	
JETTA III (1K2)	2.0, 1.4TSI, 1.6, 2.0&2.5FSI, 2.0TDI	90 - 125	08.05		F	07.B314.52	R	07.B315.22	
LUPO (6X1, 6E1)	1.4 16V, 1.4FSI, 1.6GTI, 1.4TDI	55 - 92	08.99	07.05			R	07.B315.25	
MULTIVAN	2.0, 3.2, 1.9TDI, 2.0TDI, 2.5TDI	77 - 173	09.09				R	07.B315.00	
NEW BEETLE (9C1, 1C1)	1.4, 1.6, 2.0, 2.5, 1.9TDI	55 - 110	01.98	06.05	F	07.B314.53	R	07.B315.25	
NEW BEETLE (9C1, 1C1)	1.8T, 2.3, 2.5	110 - 132	10.99	06.05	F	07.B314.54	R	07.B315.25	
PASSAT (32B)	2.2	100	01.85	03.88			R	07.B315.25	
PASSAT (3A2, 351)	2.0, 2.8	110 - 128	04.88	08.96	F	07.B314.54 or .70*	R	07.B315.25	*different wear indicators
PASSAT (3A2, 351)	1.8, 2.0, 1.9TDI	79 - 102	04.88	08.96			R	07.B315.25	
PASSAT (3B2)	1.6, 1.8, 2.0, 1.8T, 2.3, 2.8, 1.9TDI, 2.5TDI	74 - 142	10.96	11.00	F	07.B314.54	R	07.B315.25	
PASSAT (3B3)	1.6, 1.8, 2.0, 1.8T, 2.3, 2.8, 1.9TDI, 2.0TDI, 2.5TDI	75 - 142	11.00	05.05	F	07.B314.54	R	07.B315.25	
PASSAT (3C2)	1.6, 1.4, 1.6&2.0FSI, 1.4&1.8TSI, 1.9&2.0TDI	75 - 125	05.05		F	07.B314.52	R	07.B315.22	
PASSAT (3C2)	3.2FSI, 3.6 FSI, 3.6R36	184 - 220	06.05		F	07.B314.55	R	07.B315.22	
PHAETON (3D2)	3.2, 3.6, 6.0, 3.0&5.0 TDI	171 - 331	11.02		F	07.B314.01	R	07.B315.00	
POLO (6N1)	1.4, 1.6	74 - 88	04.96	10.99			R	07.B315.25	
POLO (6N2)	1.4, 1.6GTI, 1.4TDI	55 - 92	10.99	10.00			R	07.B315.25	
POLO (6R_)	1.2 ,1.4, 1.2TSI, 1.2, 1.4&1.6TDI	44 - 77	06.09		F	07.B314.52	R	07.B315.25	
POLO (6R_)	1.2, 1.4, 1.2, 1.4&1.6TDI	44 - 77	06.09		F	07.B314.53	R	07.B315.25	

The data contained in this catalogue are provided for information purposes only and therefore may be subject to change.

		kW	31		F - Part Number		R - Part Number		
POLO (9N_)	1.2, 1.4, 1.6, 1.4FSI, 1.4&1.9TDI	40 - 74	10.01		F	07.B314.53	R	07.B315.25	
POLO (9N_)	1.8GTI, 1.9TDI	96 - 110	11.03		F	07.B314.56	R	07.B315.25	
POLO (9N_)	1.8GTI Cup Edition	132	05.06		F	07.B314.54	R	07.B315.25	
QUANTUM	2.0, 2.0 Hybrid	76 - 87	08.89	07.05			R	07.B315.25	
SCIROCCO (53B)	1.8 16V	95 - 102	08.03	07.89			R	07.B315.25	
SCIROCCO (137)	1.4 & 2.0 TSI, 2.0TDI	90 - 155	09.08		F	07.B314.52	R	07.B315.25	
SCIROCCO (137)	2.0 R	195	11.09		F	07.B314.55	R	07.B315.22	
SHARAN (7M8,7M9,7M6)	1.6, 1.8, 2.0, 2.8, 1.8T, 1.9TDI	66 -150	09.95	04.00			R	07.B315.25	
SPACEFOX	1.6, 1.6FSI, 1.9SDI	47 - 74	03.06		F	07.B314.53			
TOUAREG (7LA,7L6,7L7)	3.2, 4.2, 6.0, 3.6&4.2FSI, 2.5, 3.0&5.0TDI	120 - 257	10.02	05.10	F	07.B314.20	R	07.B315.16	
TOURAN (1T1,1T2,1T3)	1.6, 2.0, 1.4TSI, 1.4&1.6FSI, 1.6, 1.9&2.0TDI	66 - 125	02.03		F	07.B314.52	R	07.B315.22	
TRANSPORTER V BOX	2.0, 3.2, 1.9,2.0&2.5 TDI	63 - 132	04.03				R	07.B315.00	
UP	1.0	44 - 55	12.11		F	07.B314.53			
VENTO (1H2)	1.6, 1.8, 2.0, 2.8, 1.9TDI	62 - 128	11.91	09.98	F	07.B314.54 or .70*	R	07.B315.25	*different wear indicators

NOTES

Note 1
For VAG cars based on the Golf platforms the rear pad can be different specifications depending on the disc diameter.

Front	MkI platform	Ø 312 disc	07.8314.27	Rear	Ø 300 disc (A4&A6 only)	07.8315.00
Front	MkII platform	Ø 288 & Ø 0312 disc	07.8314.52	Rear	Ø 288 disc	07.8315.22
Front	MkII platform	Ø 340 disc	07.8314.55	Rear	Ø 245 & Ø 255 disc	07.8315.25

(Note, TT MKII is a Iso Golf 5 platform, Seat Leon MKII, Skoda Octavia MKII.)

The data contained in this catalogue are provided for information purposes only and therefore may be subject to change.

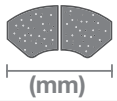

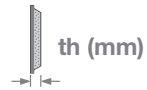

07.B314.01 – 07.B314.04

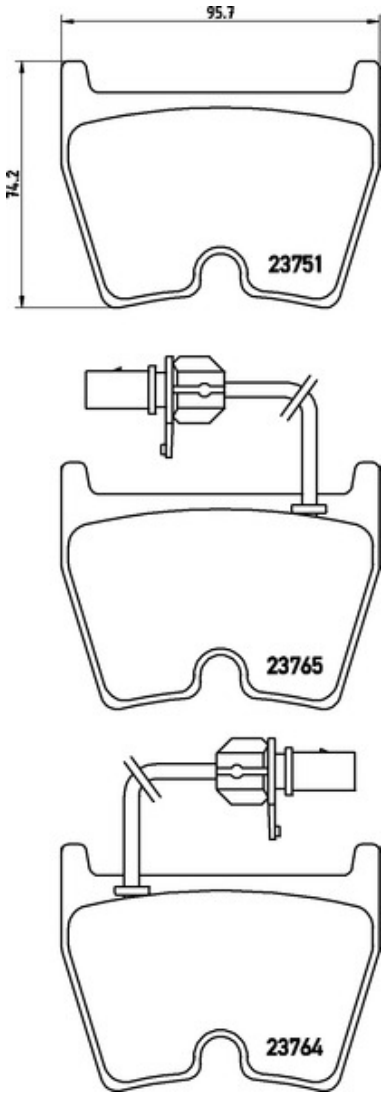

07.B314.01 th 16.7mm

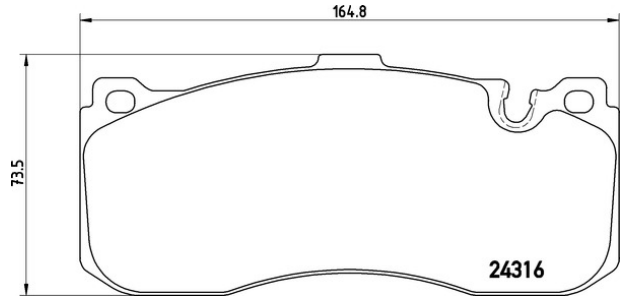

07.B314.02 th 17.0mm

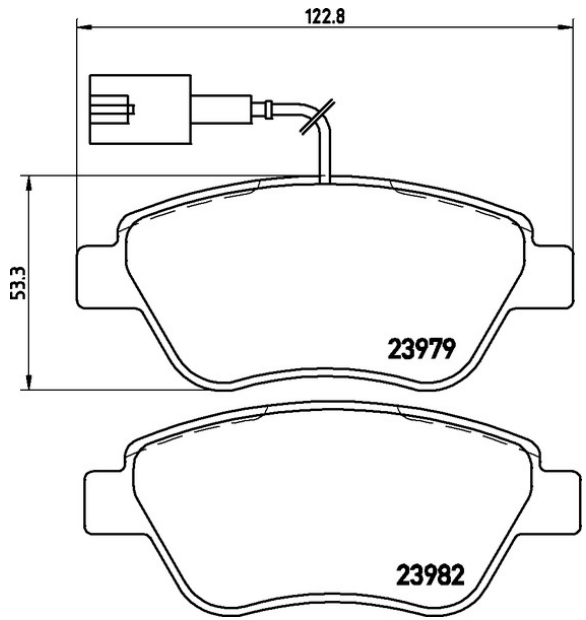

07.B314.04 th 17.8mm

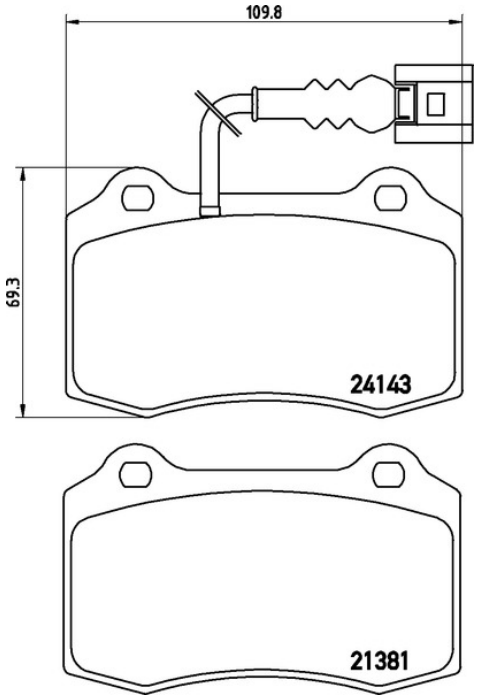

07.B314.03 th 15.0mm

The data contained in this catalogue are provided for information purposes only and therefore may be subject to change.

(mm) (mm) th (mm)

07.B314.05 – 07.B314.10

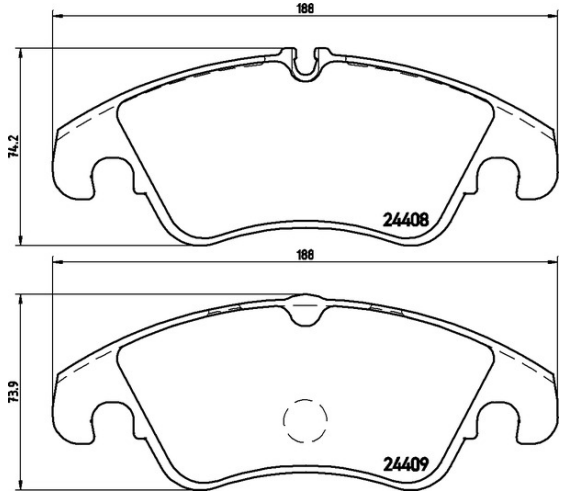

07.B314.05 th 18.7mm

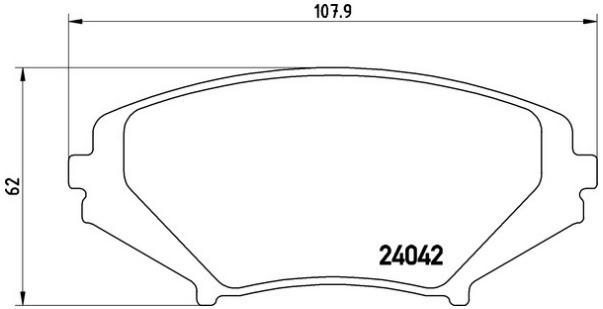

07.B314.08 th 16.3mm

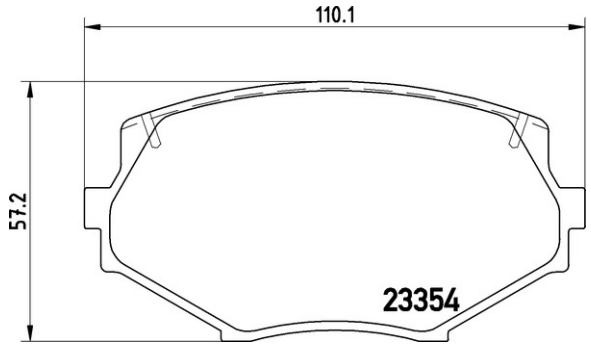

07.B314.06 th 14mm

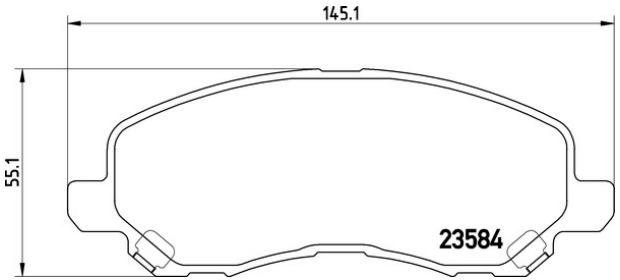

07.B314.09 th 16mm

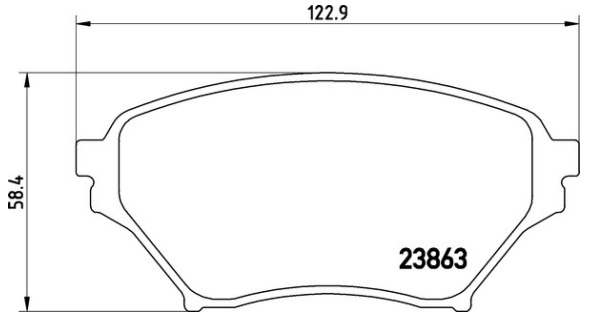

07.B314.07 th 15mm

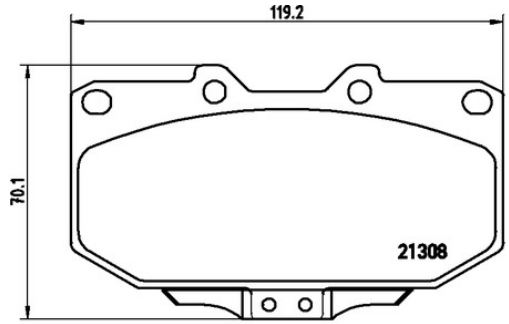

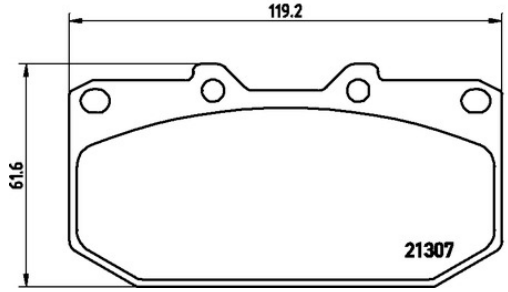

07.B314.10 th 15mm

The data contained in this catalogue are provided for information purposes only and therefore may be subject to change.

07.B314.11 – 07.B314.16

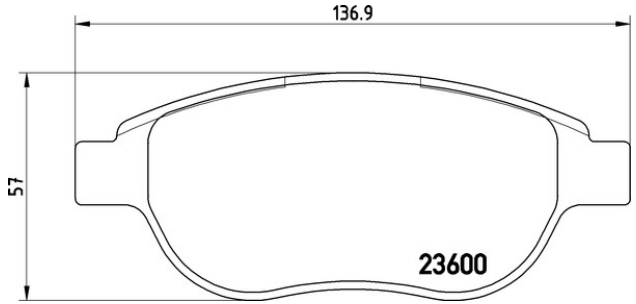

07.B314.11 th 18.4mm

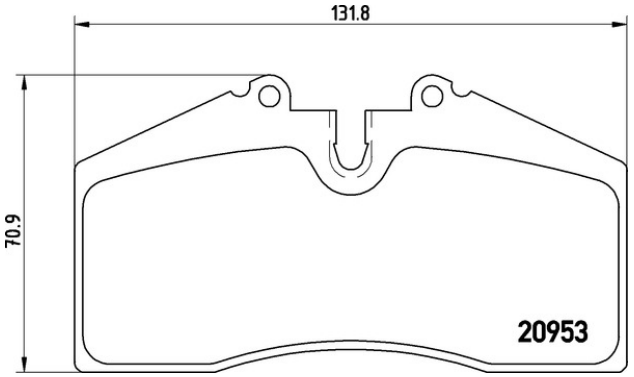

07.B314.12 th 17.5mm

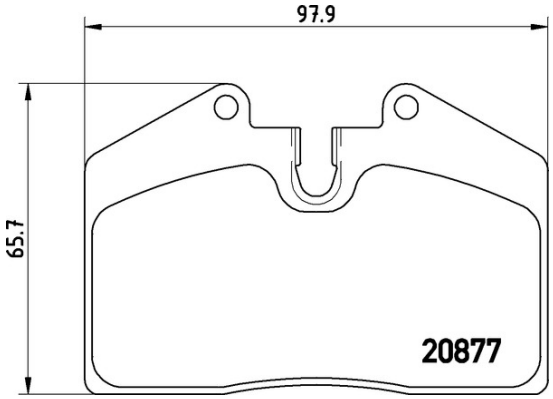

07.B314.13 th 17.5mm

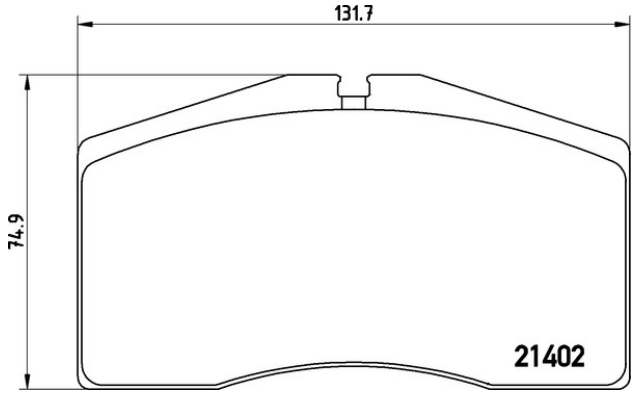

07.B314.14 th 17.5mm

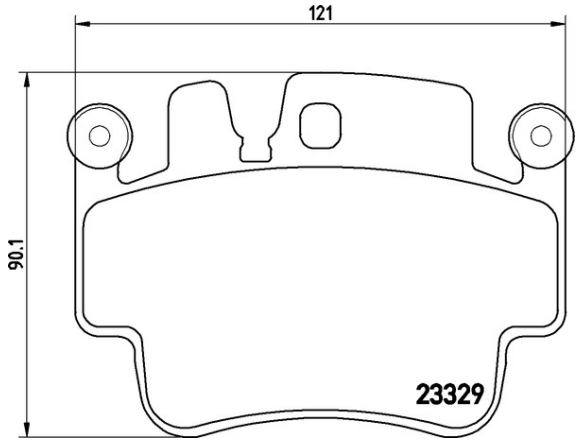

07.B314.15 th 17mm

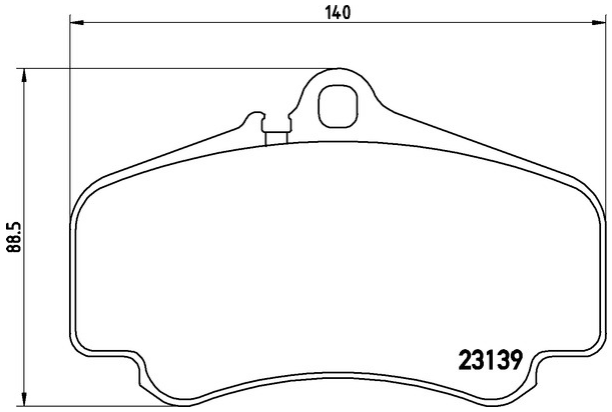

07.B314.16 th 17mm

The data contained in this catalogue are provided for information purposes only and therefore may be subject to change.

07.B314.17 – 07.B314.22

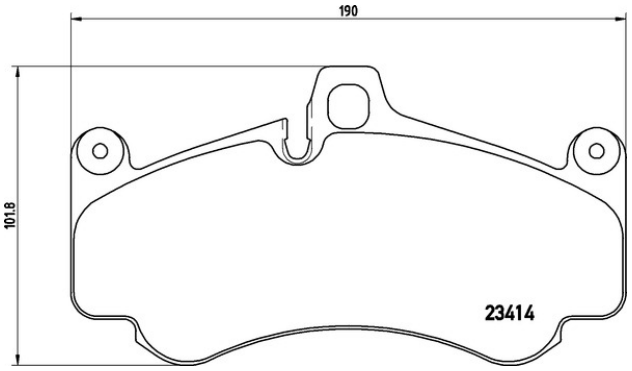

07.B314.17 th 17mm

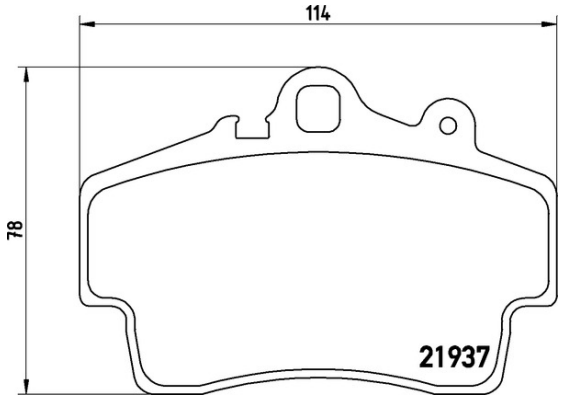

07.B314.18 th 16.2mm

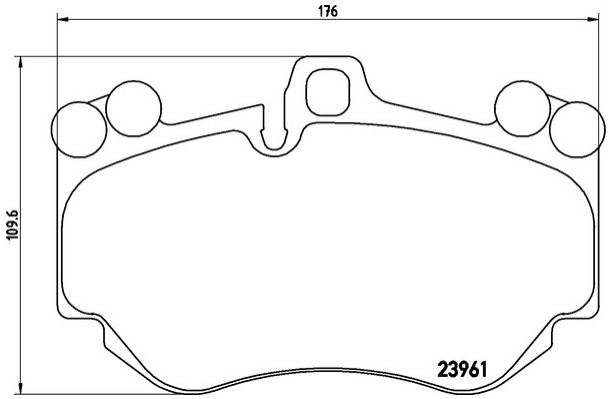

07.B314.19 th 17mm

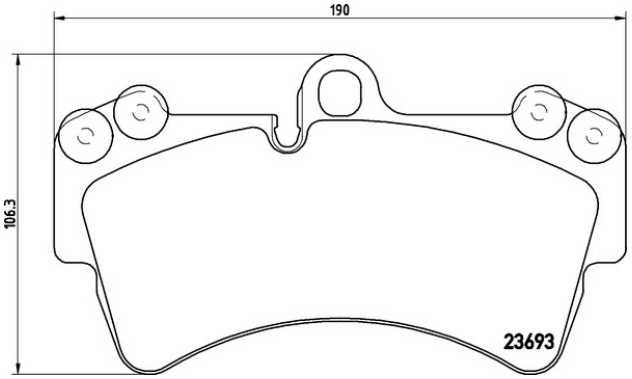

07.B314.20 th 16.7mm

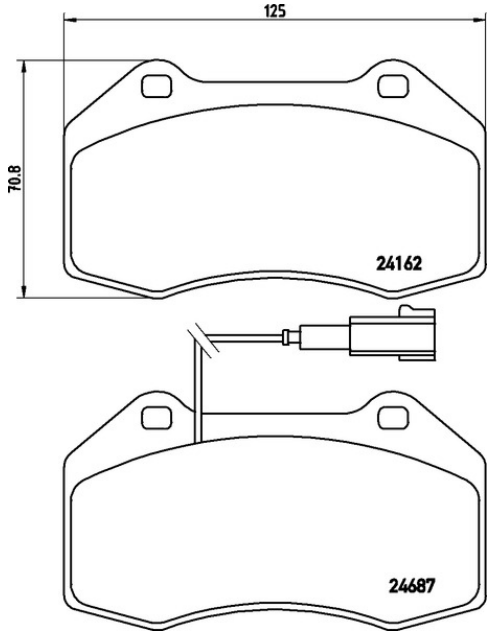

07.B314.21 th 15.3mm

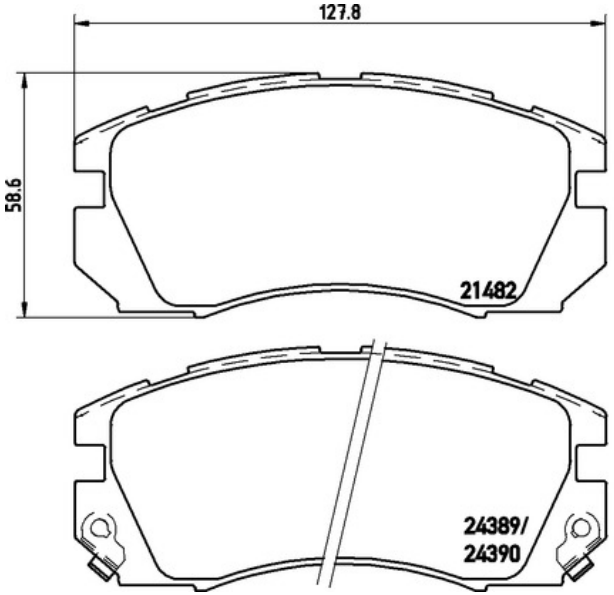

07.B314.22 th 16.7mm

The data contained in this catalogue are provided for information purposes only and therefore may be subject to change.

(mm)

(mm)

th (mm)

07.B314.23 – 07.B314.26

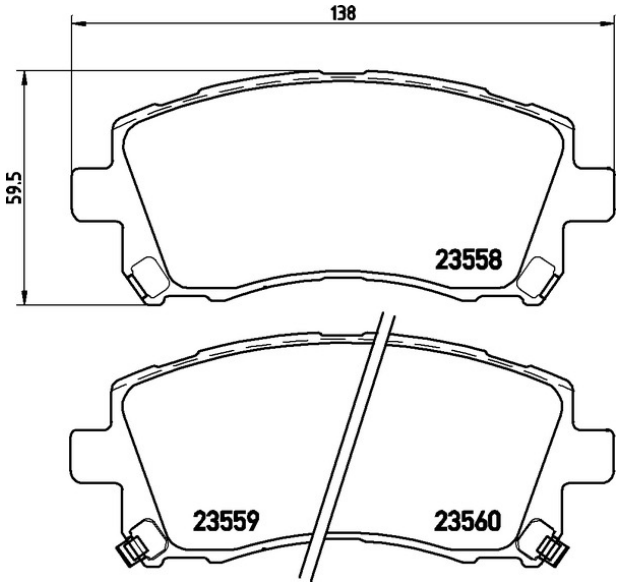

07.B314.23 th 17mm

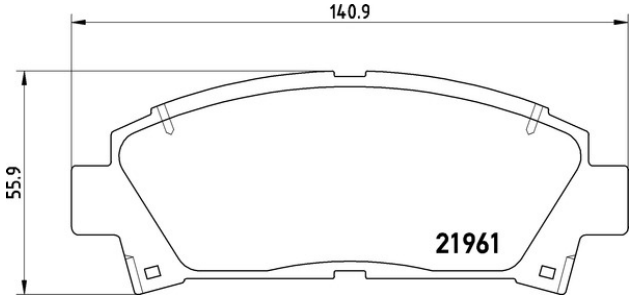

07.B314.24 th 15mm

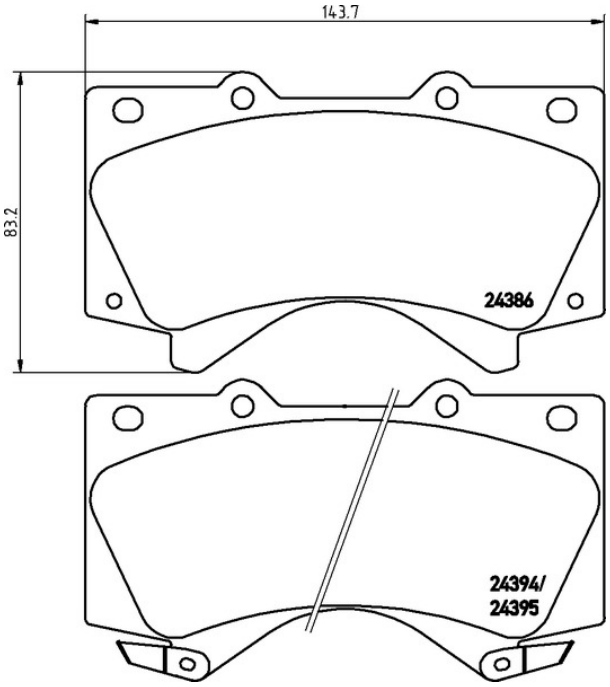

07.B314.25 th 17.9mm

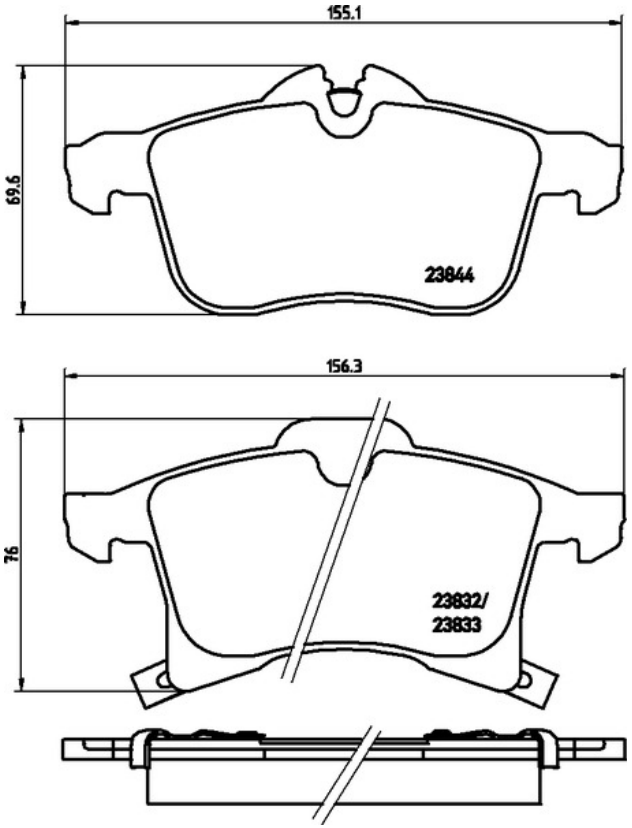

07.B314.26 th 19.6mm

The data contained in this catalogue are provided for information purposes only and therefore may be subject to change.

(mm) (mm) th (mm)

07.B314.27 – 07.B314.31

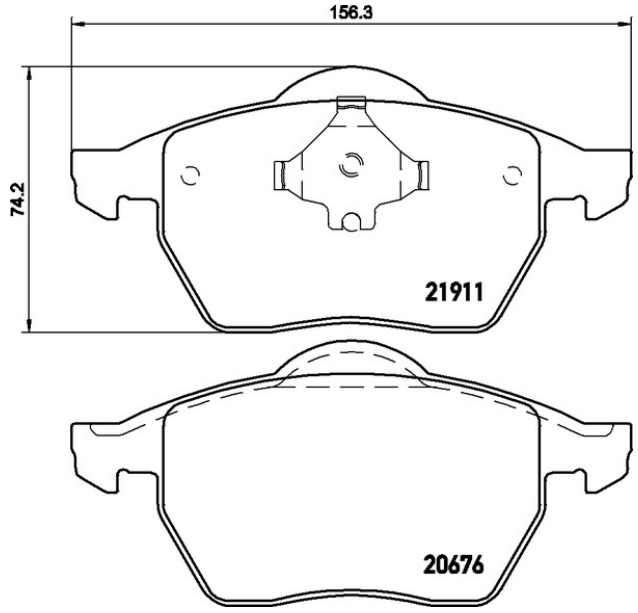

07.B314.27 th 19.3mm

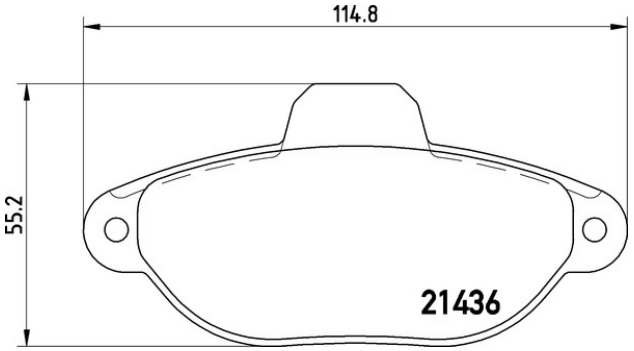

07.B314.28 th 17mm

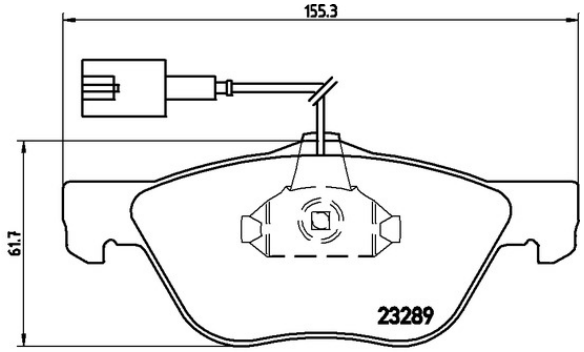

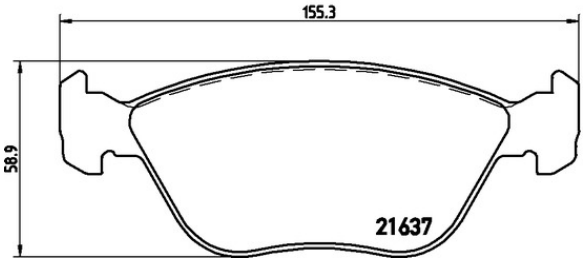

07.B314.29 th 18mm

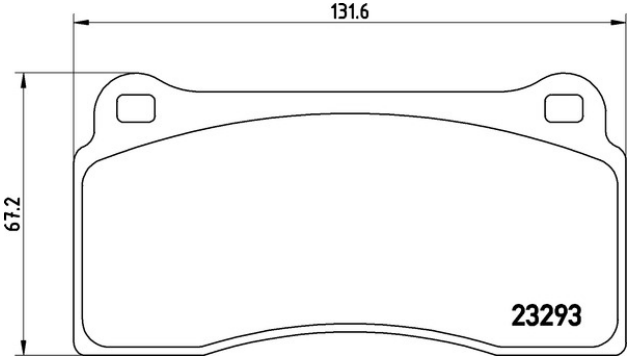

07.B314.30 th 18mm

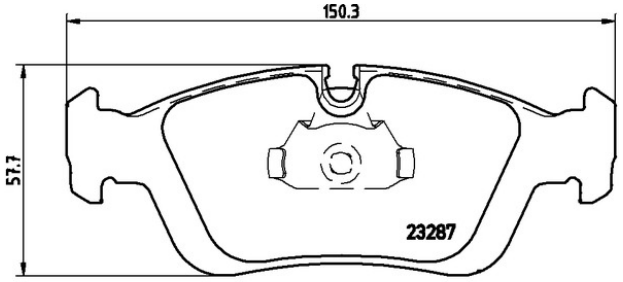

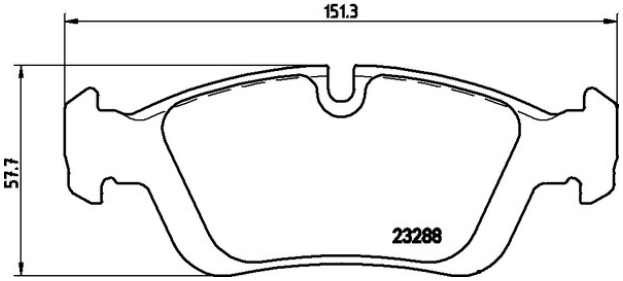

07.B314.31 th 17.3mm

The data contained in this catalogue are provided for information purposes only and therefore may be subject to change.

(mm)

(mm)

th (mm)

07.B314.32 – 07.B314.36

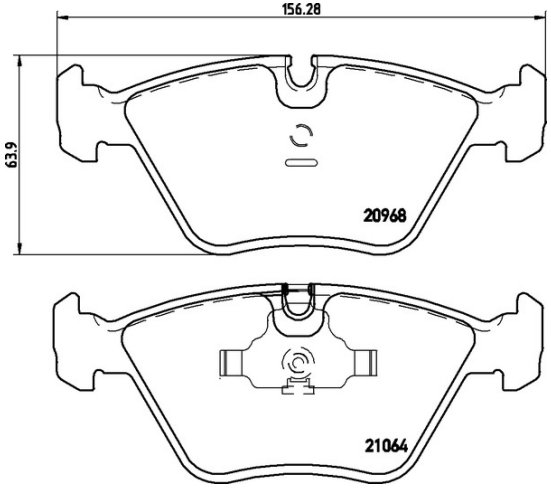

07.B314.32 th 20.3mm

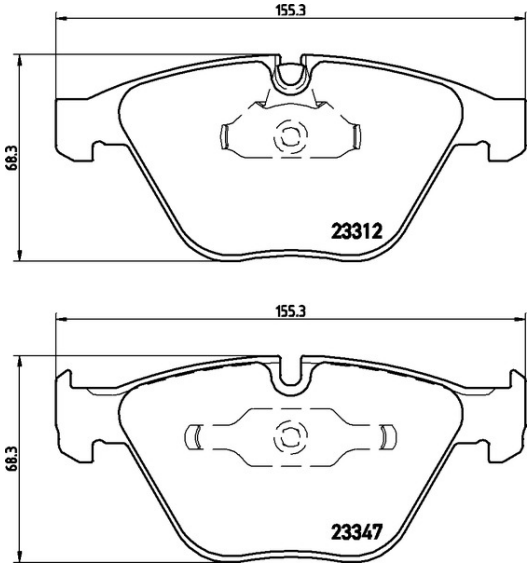

07.B314.35 th 20.3mm

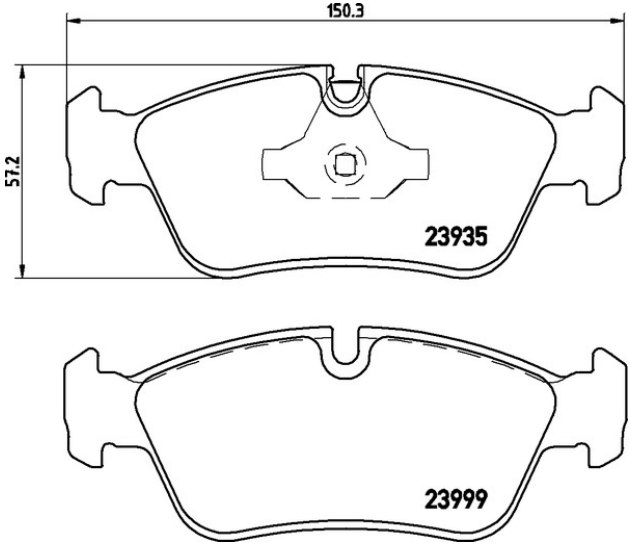

07.B314.33 th 17.6mm

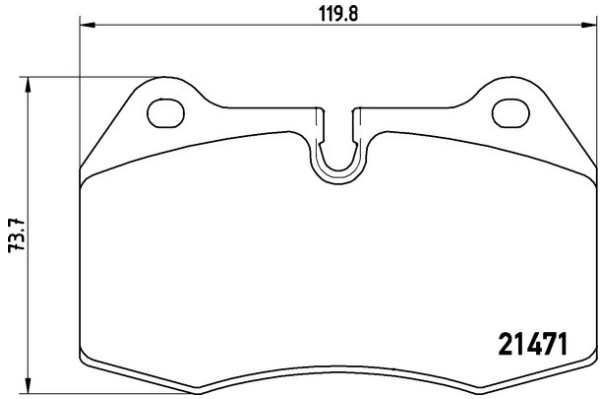

07.B314.36 th 18mm

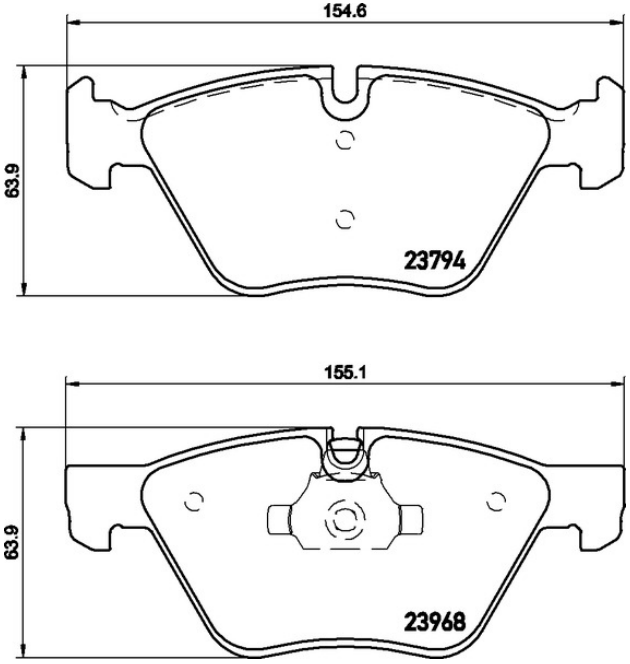

07.B314.34 th 19.8mm

The data contained in this catalogue are provided for information purposes only and therefore may be subject to change.

(mm) (mm) th (mm)

07.B314.37 – 07.B314.39

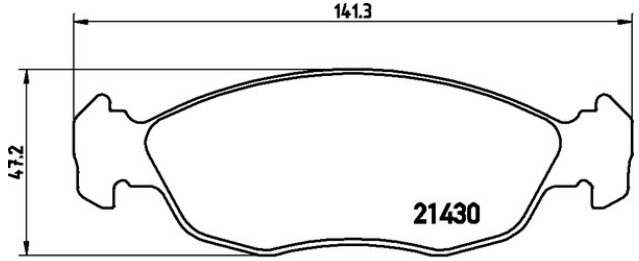

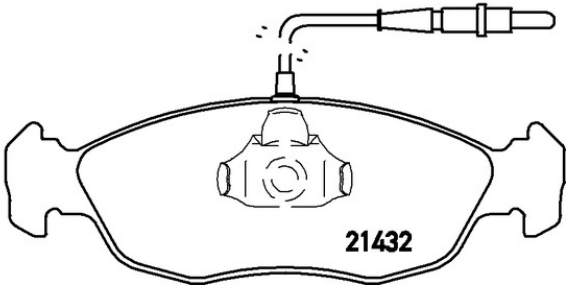

07.B314.37 th 17mm

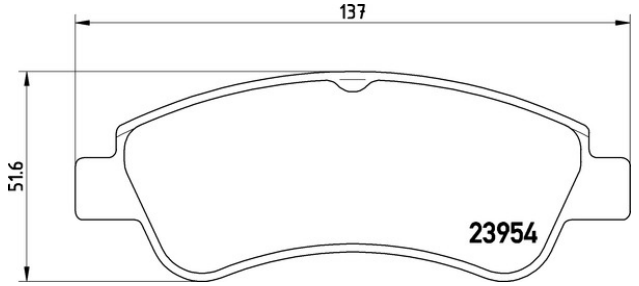

07.B314.38 th 19mm

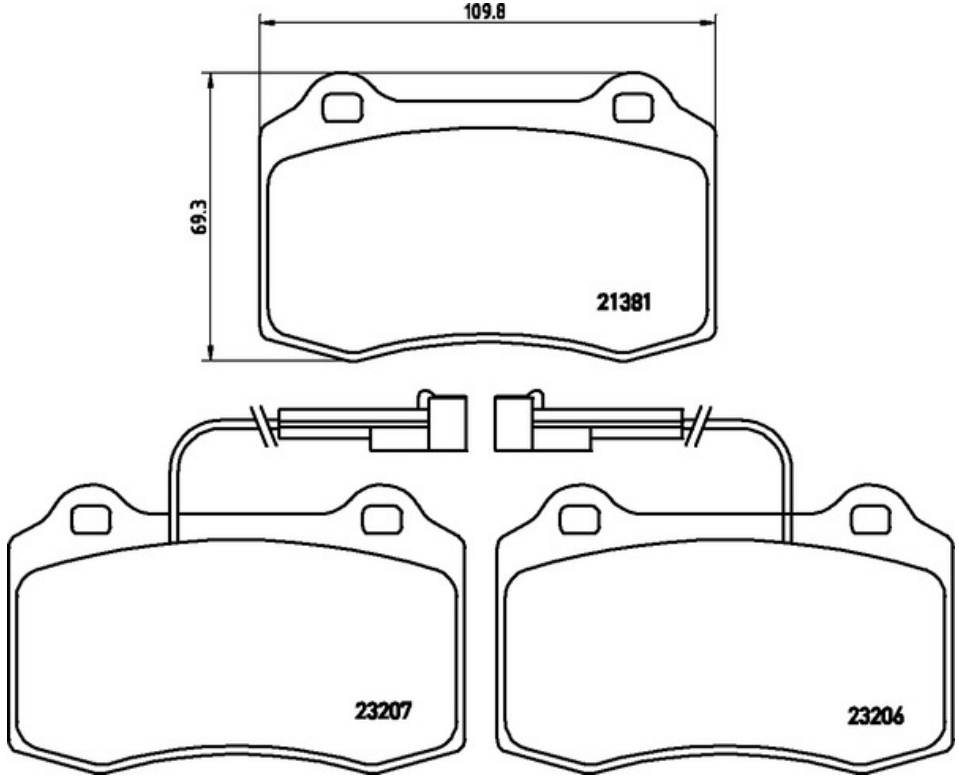

07.B314.39 th 16.8mm

The data contained in this catalogue are provided for information purposes only and therefore may be subject to change.

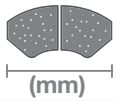

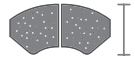

07.B314.40 – 07.B314.43

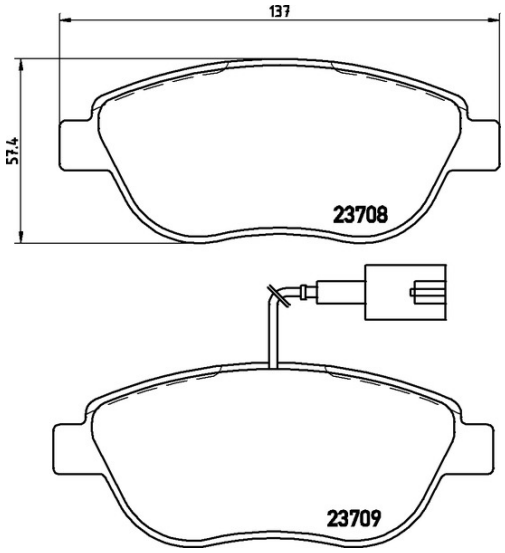

07.B314.40 th 18.4mm

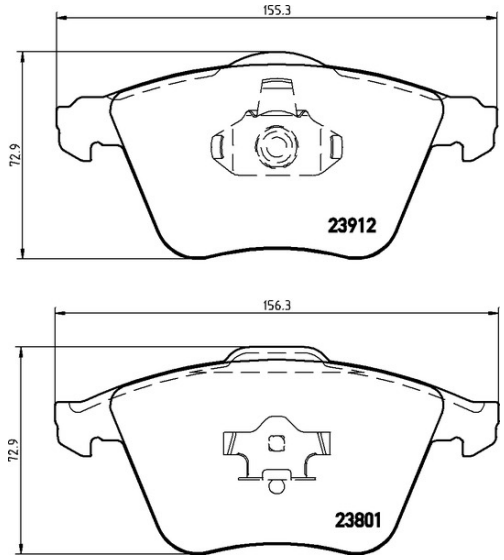

07.B314.41 th 18.5mm

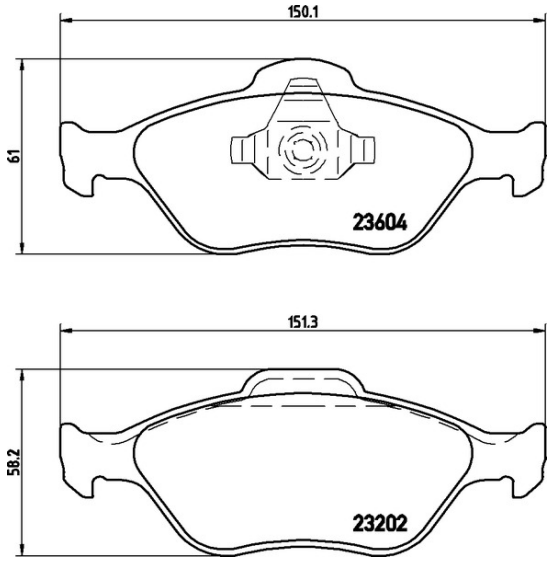

07.B314.43 th 18mm

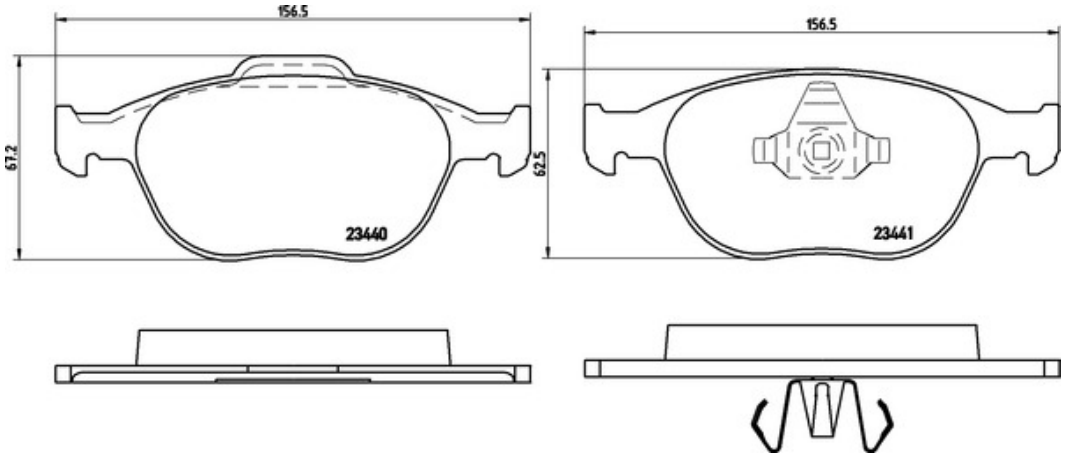

07.B314.42 th 17.5mm

The data contained in this catalogue are provided for information purposes only and therefore may be subject to change.

(mm) (mm) th (mm)

07.B314.44 – 07.B314.48

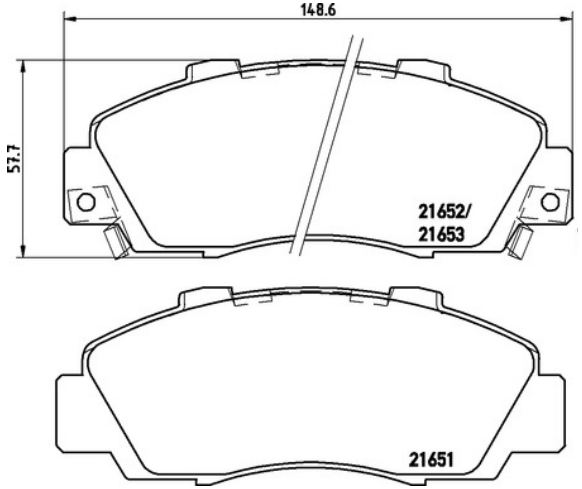

07.B314.44 th 18mm

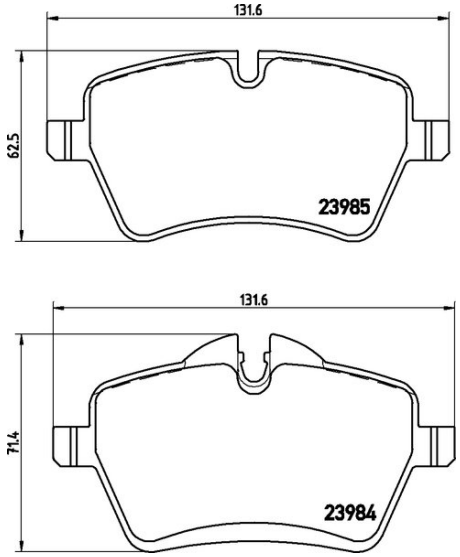

07.B314.47 th 17.6mm

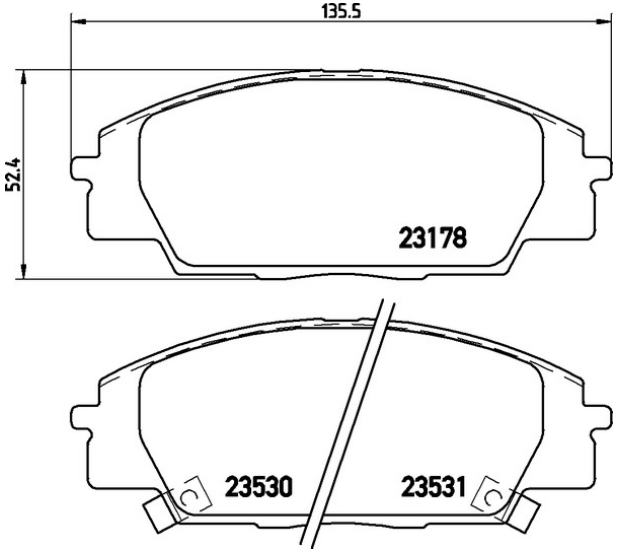

07.B314.45 th 16mm

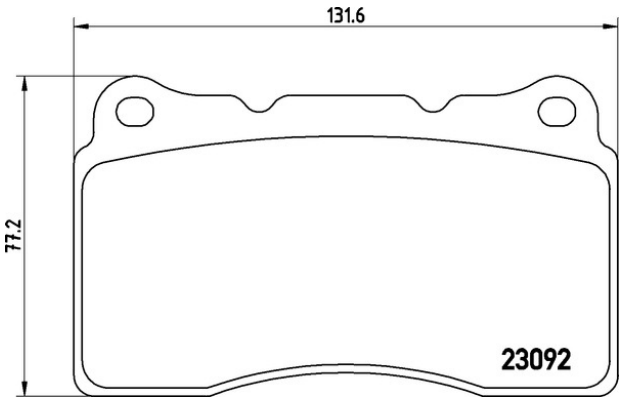

07.B314.48 th 16mm

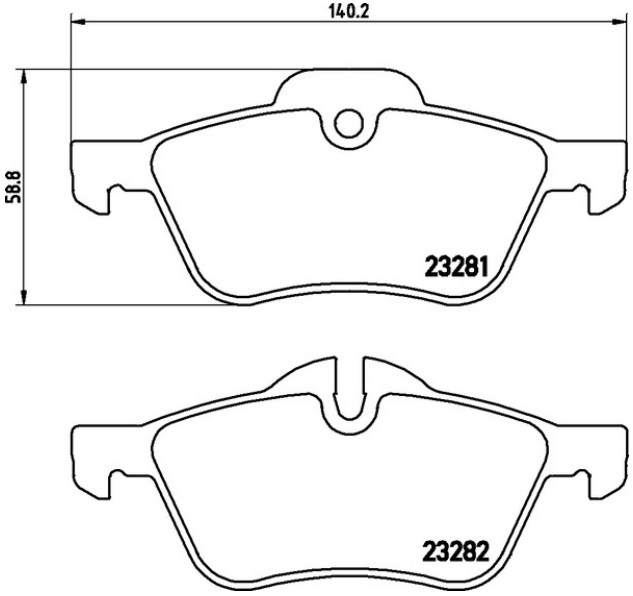

07.B314.46 th 18mm

The data contained in this catalogue are provided for information purposes only and therefore may be subject to change.

07.B314.49 – 07.B314.51

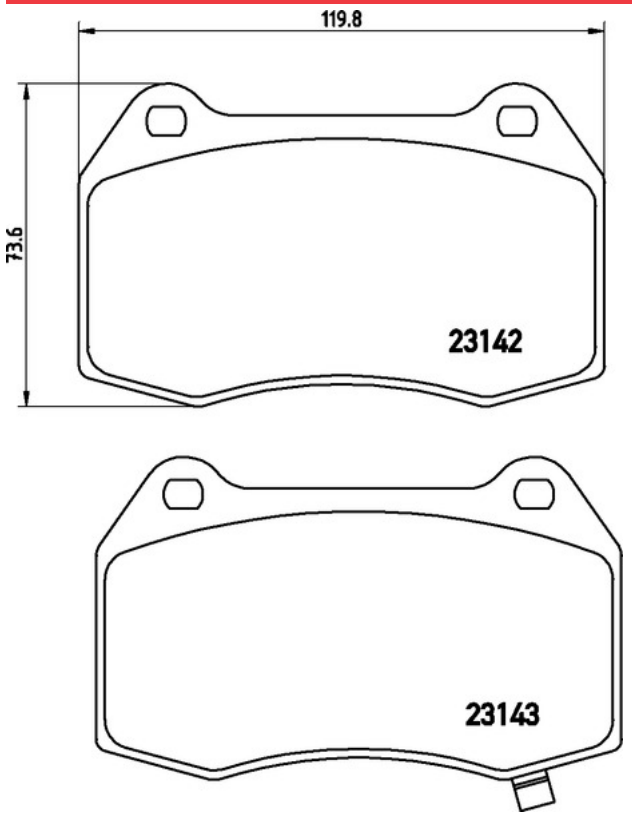

07.B314.49 th 15mm

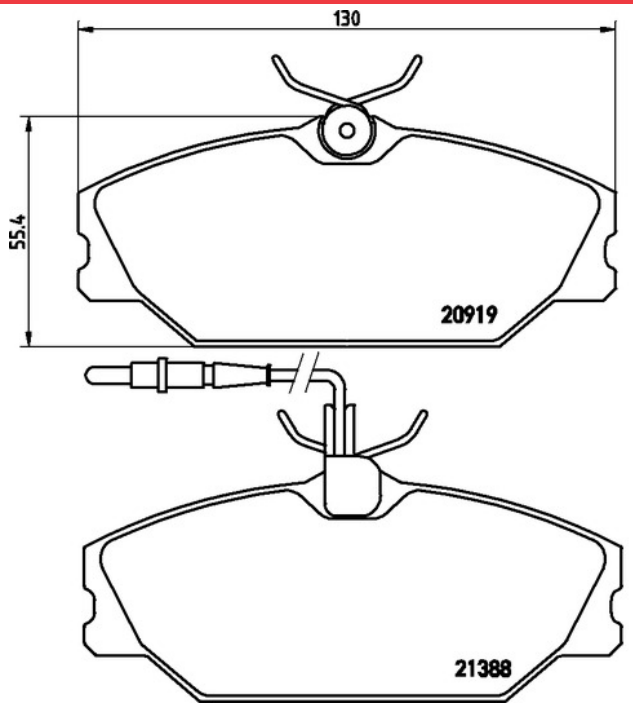

07.B314.50 th 18mm

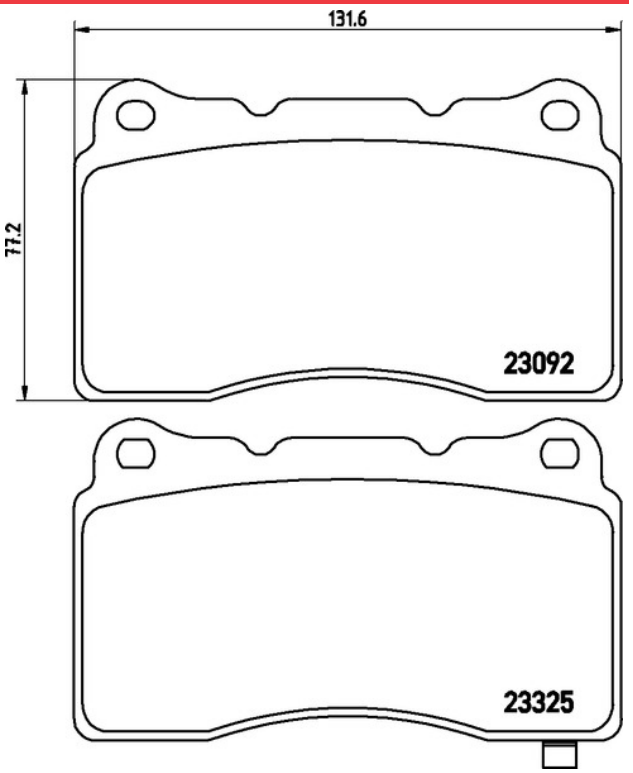

07.B314.51 th 14.7mm

The data contained in this catalogue are provided for information purposes only and therefore may be subject to change.

(mm)

(mm)

th (mm)

07.B314.52 – 07.B314.54

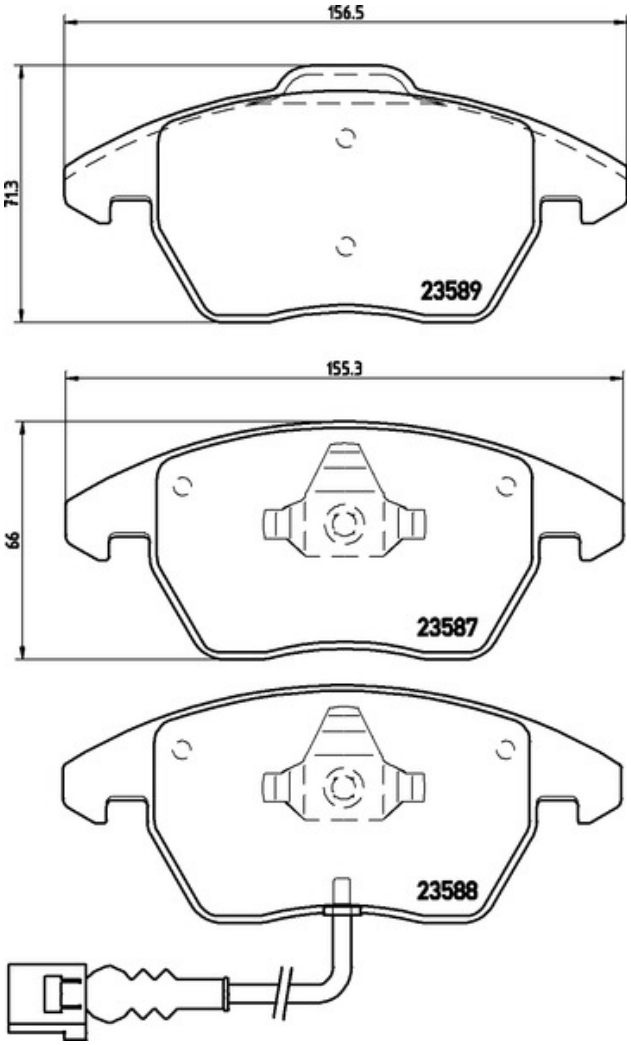

07.B314.52 th 20.3mm

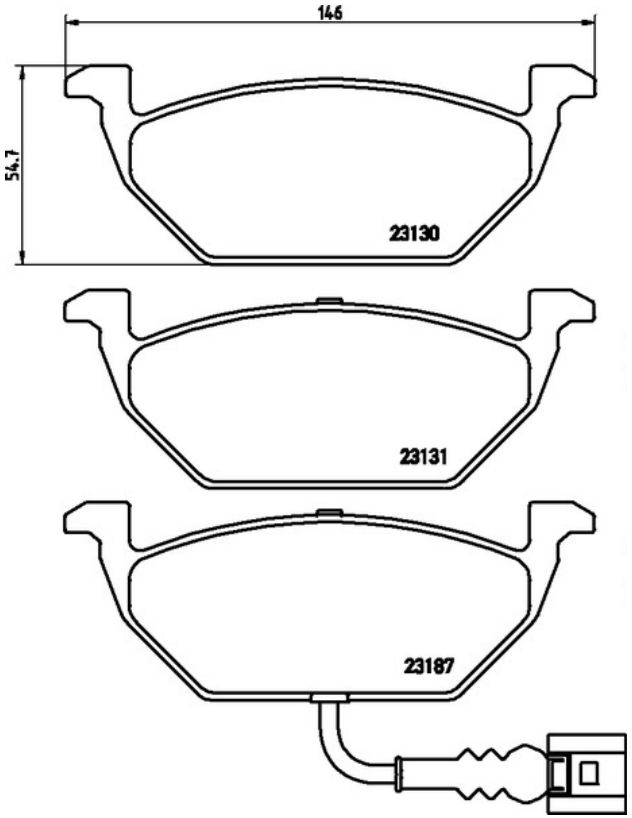

07.B314.53 th 19.7mm

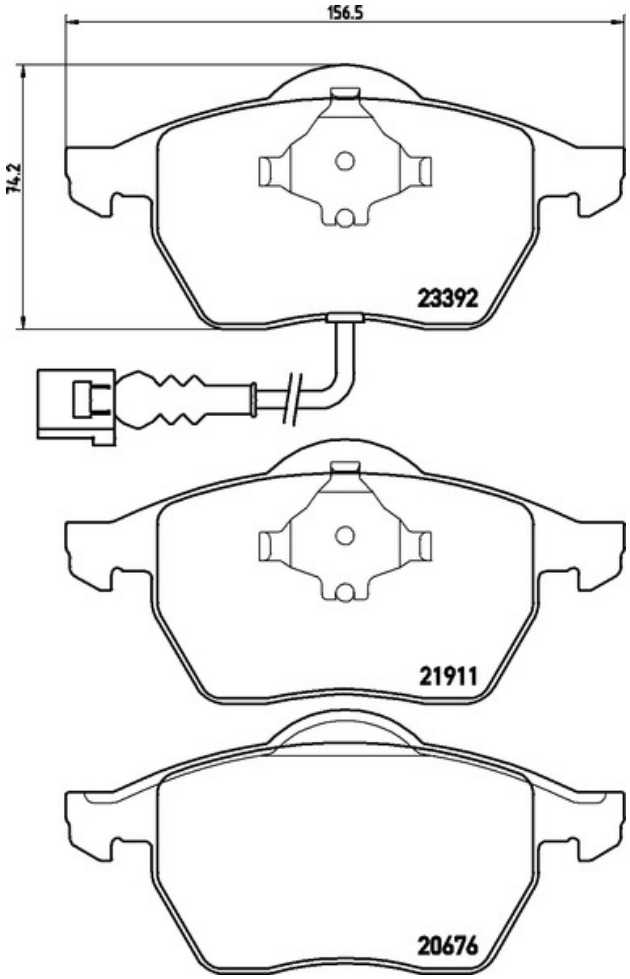

07.B314.54 th 19.5mm

The data contained in this catalogue are provided for information purposes only and therefore may be subject to change.

07.B314.55 – 07.B314.57

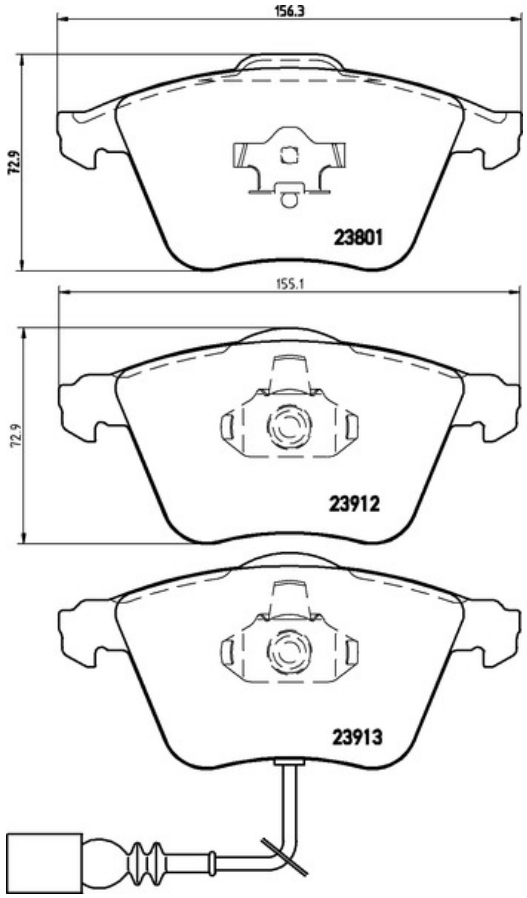

07.B314.55 th 20.4mm

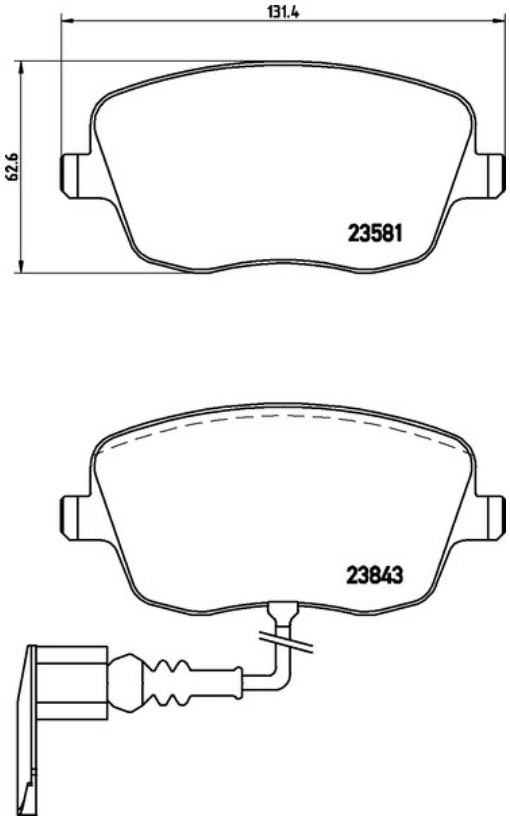

07.B314.56 th 19mm

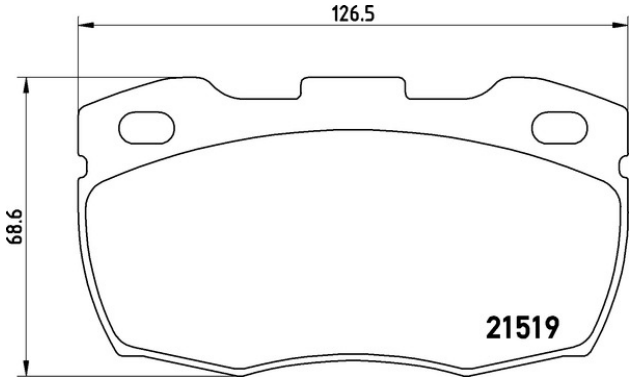

07.B314.57 th 17mm

The data contained in this catalogue are provided for information purposes only and therefore may be subject to change.

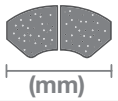

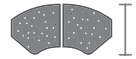

07.B314.60 – 07.B314.62

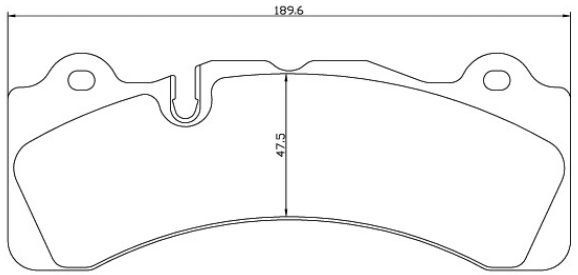

07.B314.58 th 16.8mm

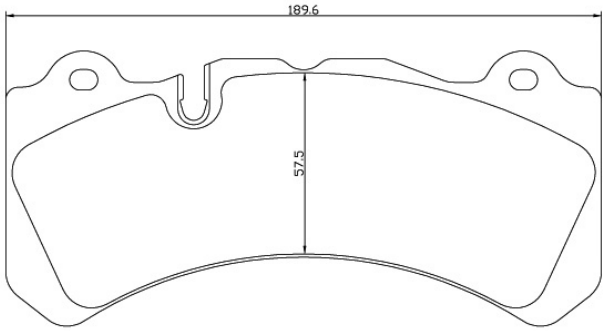

07.B314.59 th 16.8mm

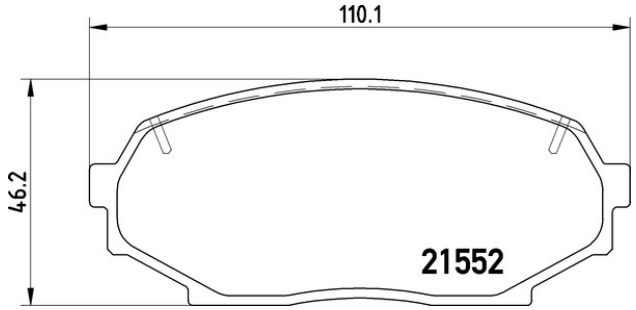

07.B314.60 th 14.4mm

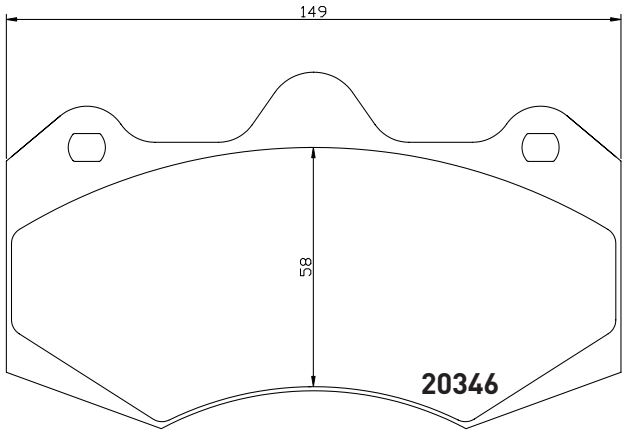

07.B314.61 th 17mm

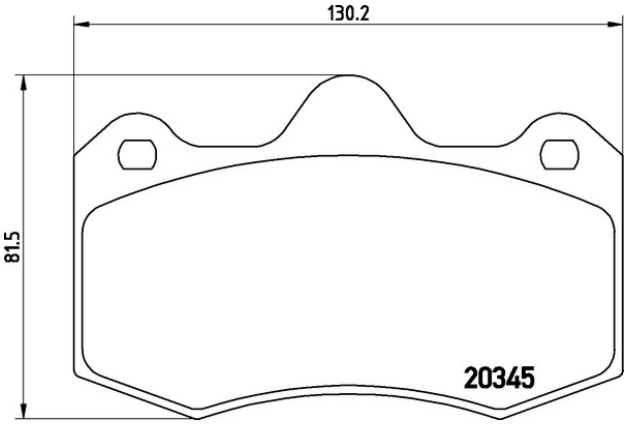

07.B314.62 th 17mm

The data contained in this catalogue are provided for information purposes only and therefore may be subject to change.

(mm)

(mm)

th (mm)

07.B314.69 – 07.B314.71

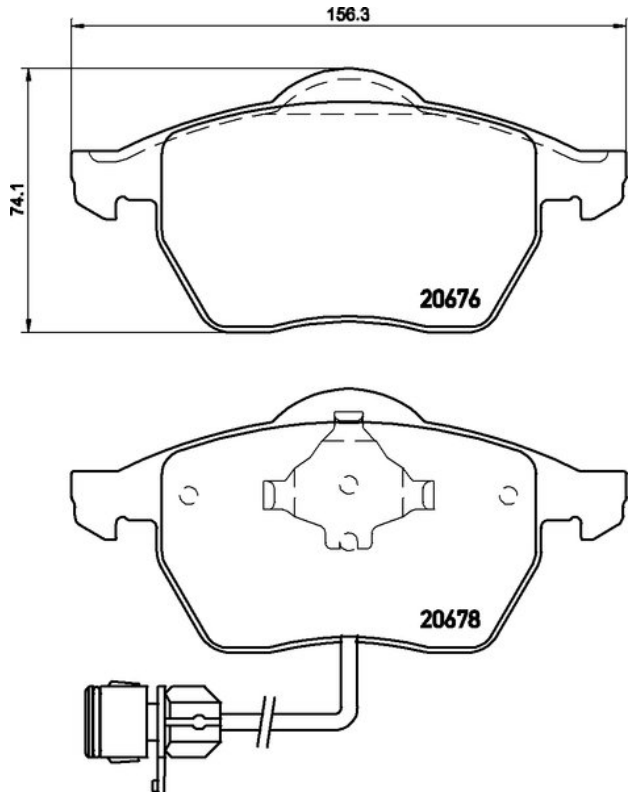

07.B314.69

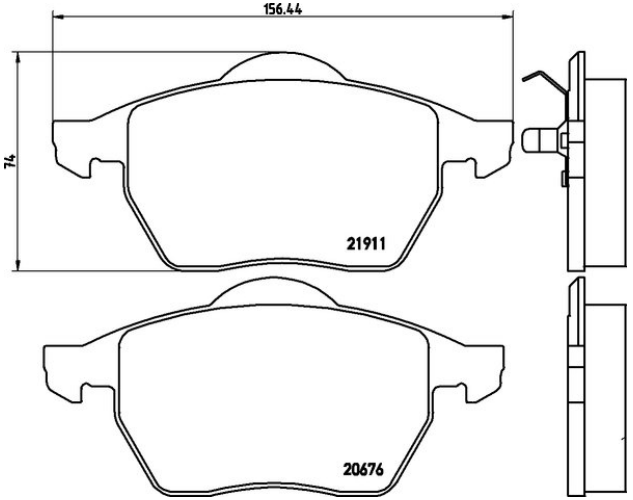

07.B314.70

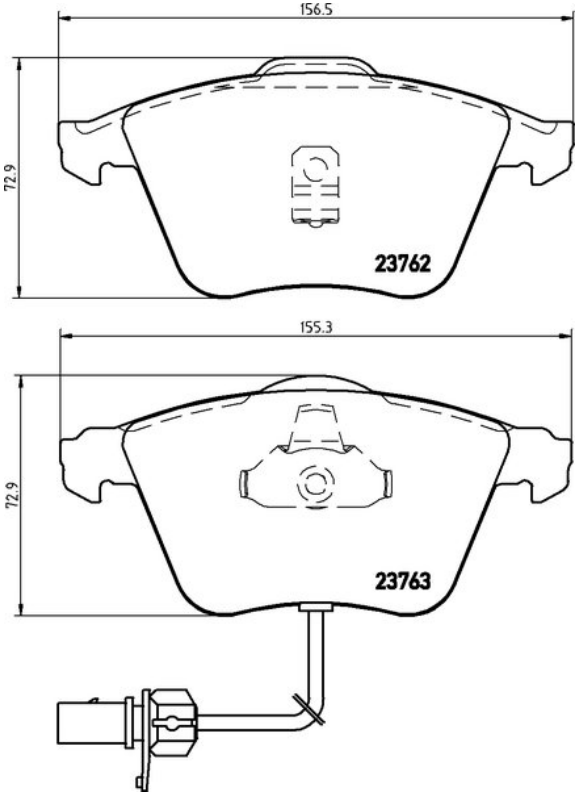

07.B314.71

The data contained in this catalogue are provided for information purposes only and therefore may be subject to change.

(mm) (mm) th (mm)

07.B314.72 – 07.B314.77

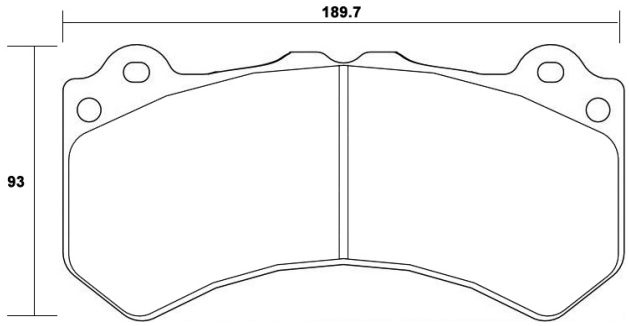

07.B314.72

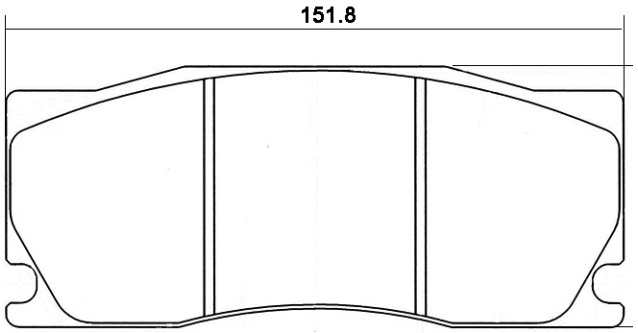

07.B314.77

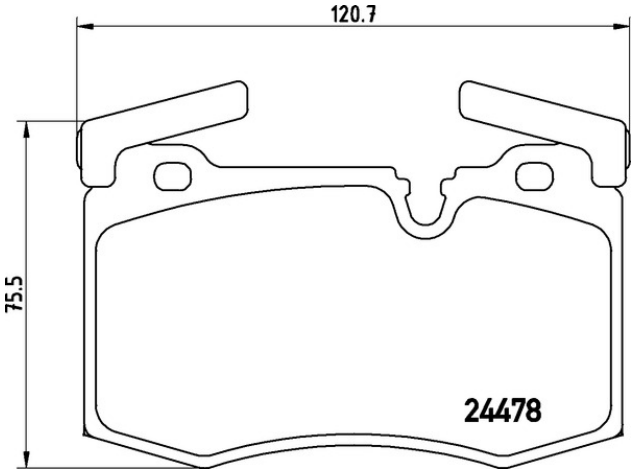

07.B314.74

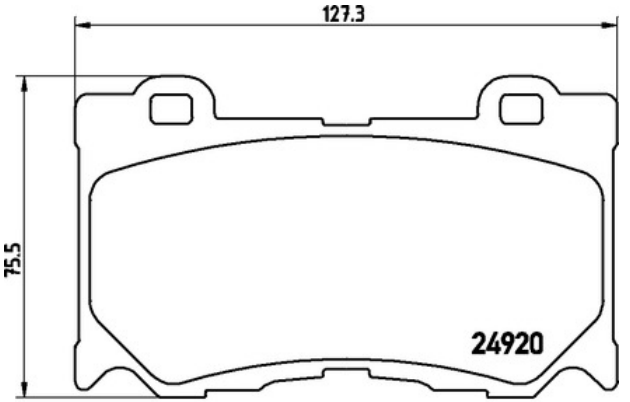

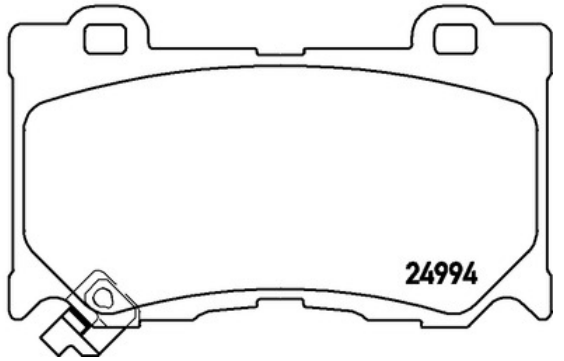

07.B314.75

The data contained in this catalogue are provided for information purposes only and therefore may be subject to change.

07.B315.00 – 07.B315.04

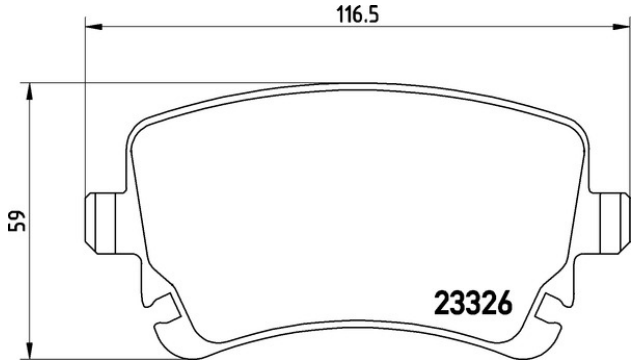

07.B315.00 th 17.2mm

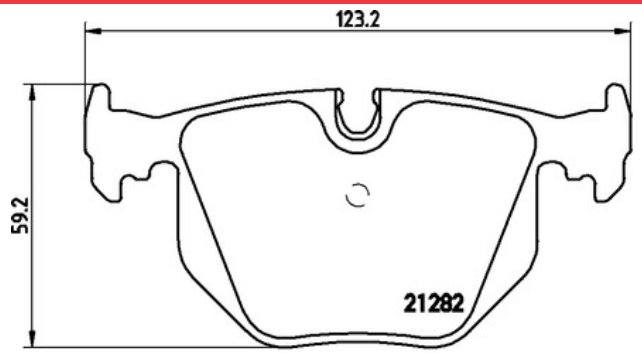

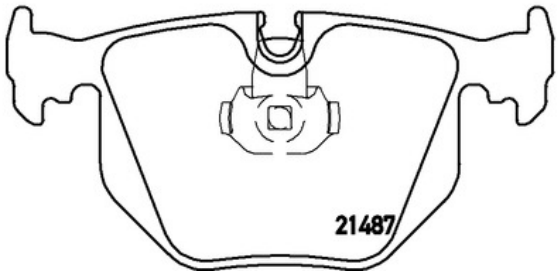

07.B315.01 th 17.3mm

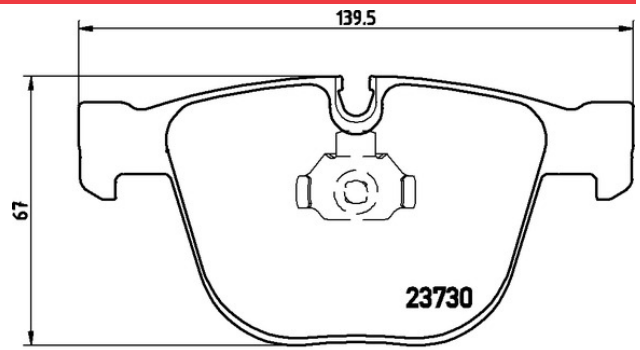

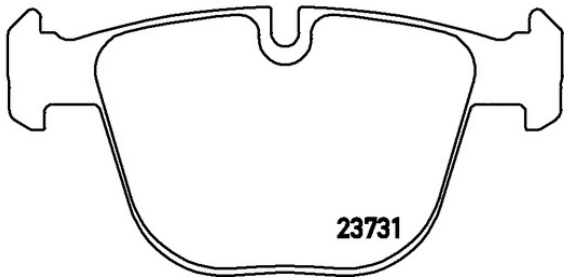

07.B315.02 th 17mm

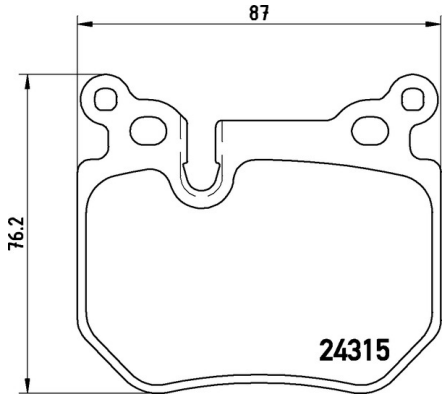

07.B315.03 th 17.1mm

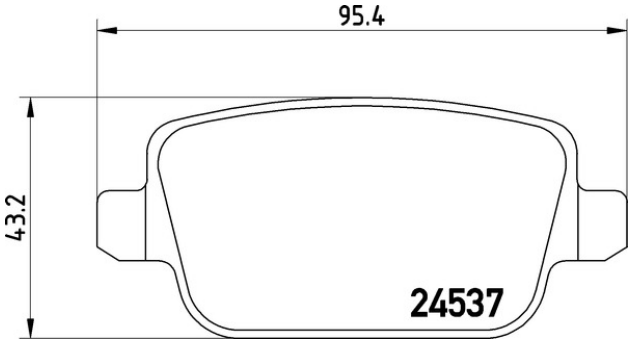

07.B315.04 th 16mm

The data contained in this catalogue are provided for information purposes only and therefore may be subject to change.

(mm) (mm) th (mm)

07.B315.05 – 07.B315.09

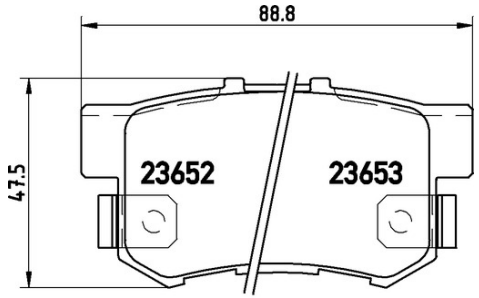

07.B315.05 th 14.8mm

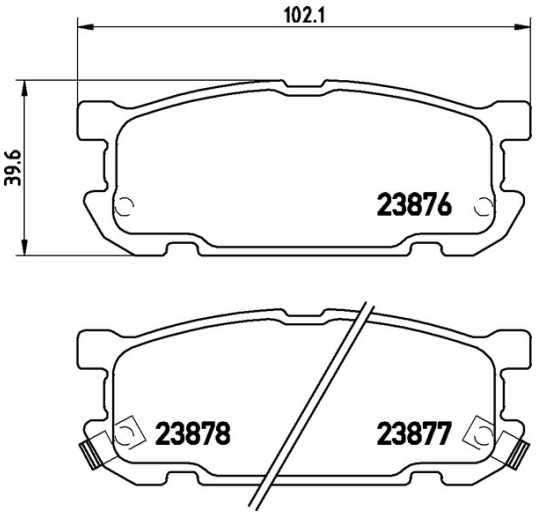

07.B315.08 th 12mm

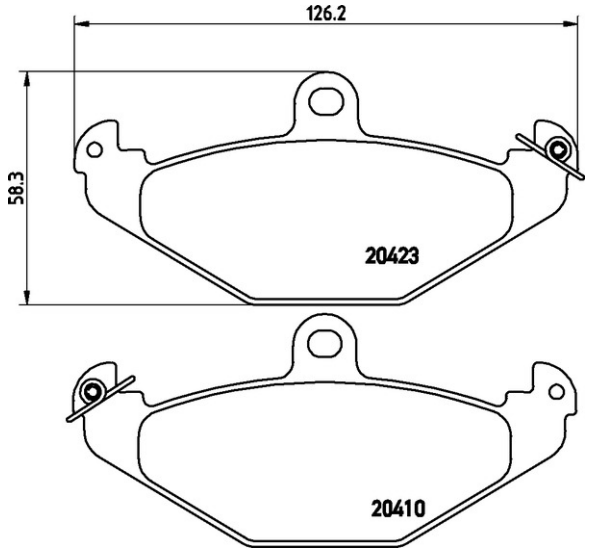

07.B315.06 th 13mm

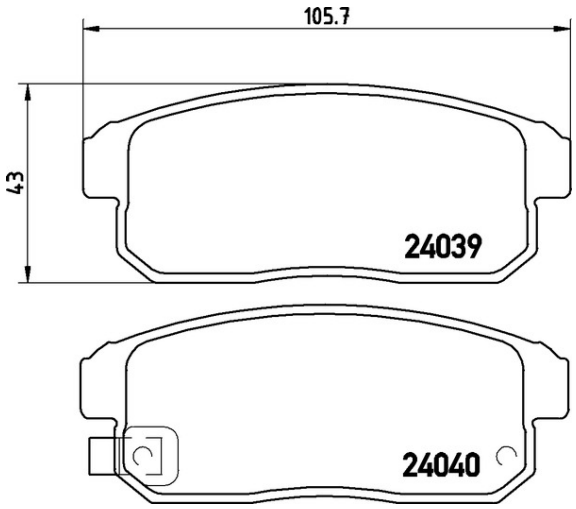

07.B315.09 th 14.4mm

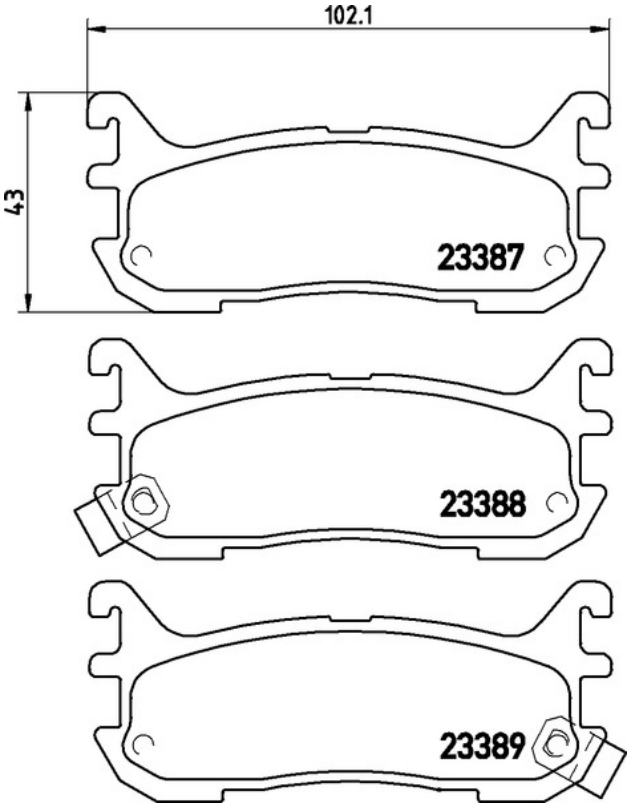

07.B315.07 th 13mm

The data contained in this catalogue are provided for information purposes only and therefore may be subject to change.

(mm) (mm) th (mm)

07.B315.10 – 07.B315.14

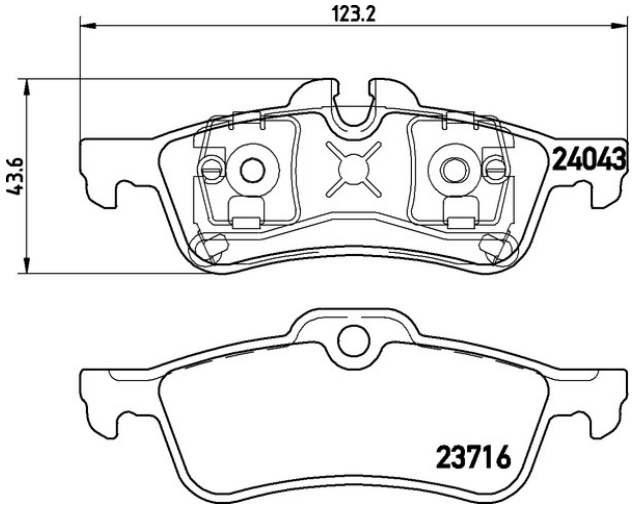

07.B315.10 th 16.3mm

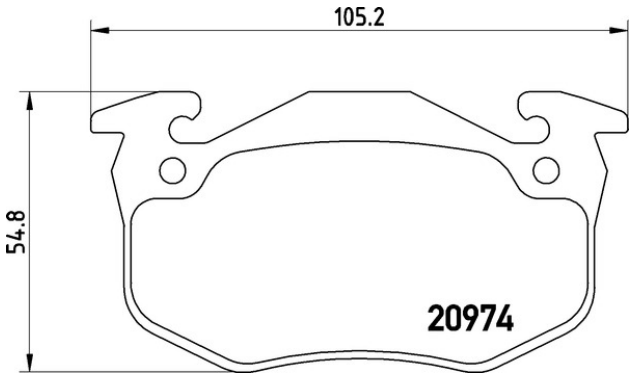

07.B315.13 th 11mm

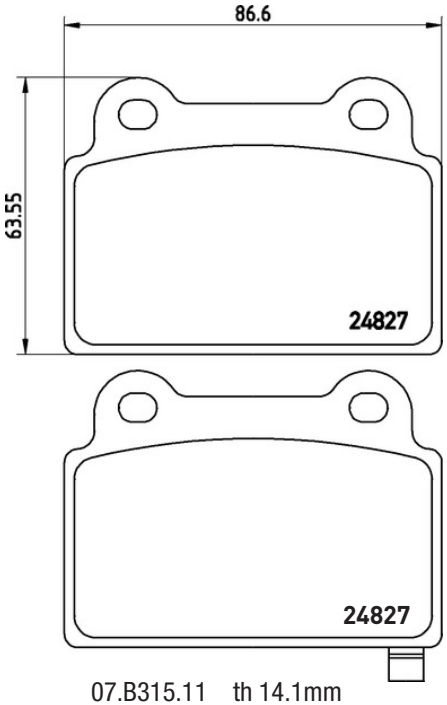

07.B315.11 th 14.1mm

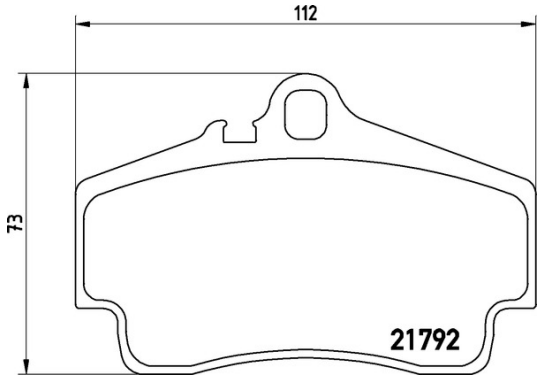

07.B315.14 th 15.5mm

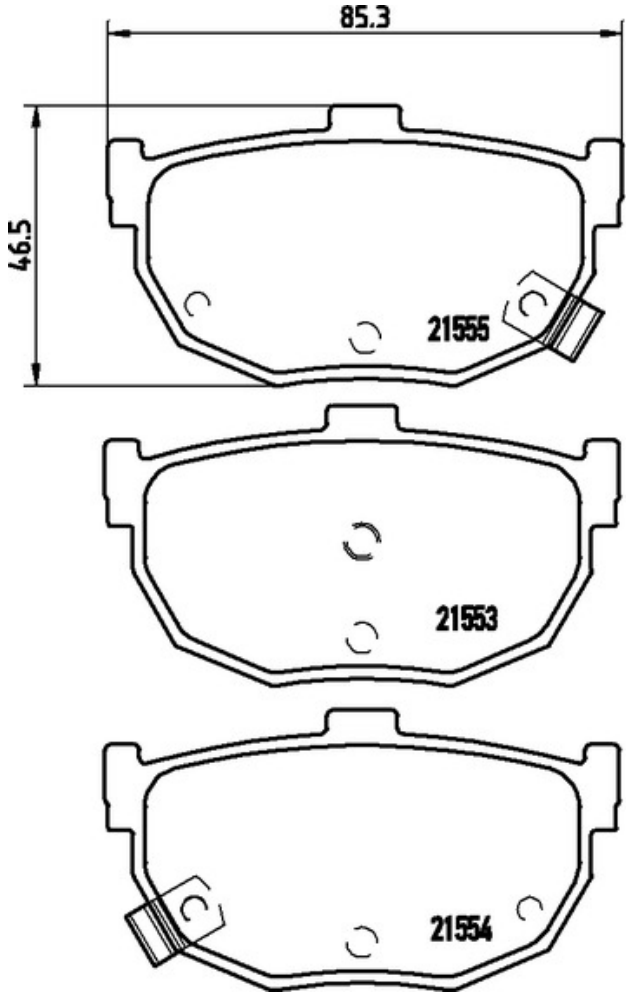

07.B315.12 th 14mm

The data contained in this catalogue are provided for information purposes only and therefore may be subject to change.

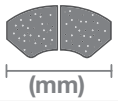

07.B315.15 – 07.B315.20

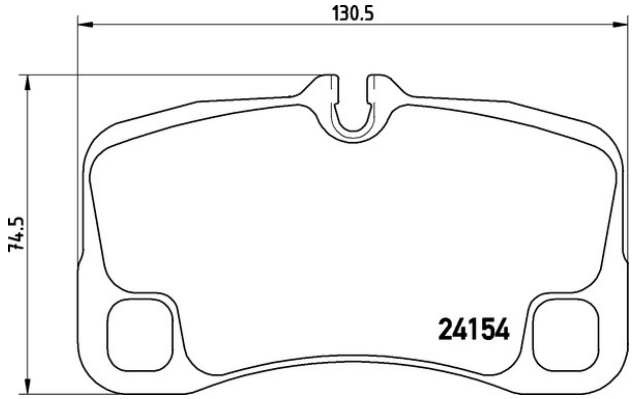

07.B315.15 th 17mm

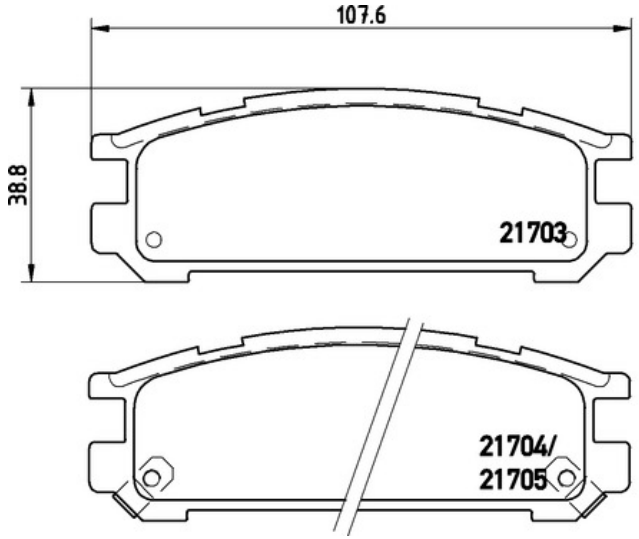

07.B315.18 th 14.8mm

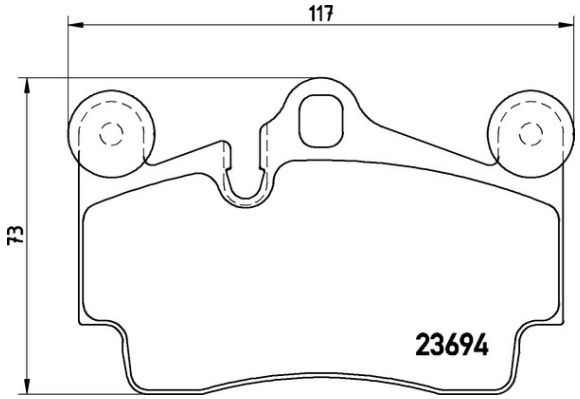

07.B315.16 th 16.7mm

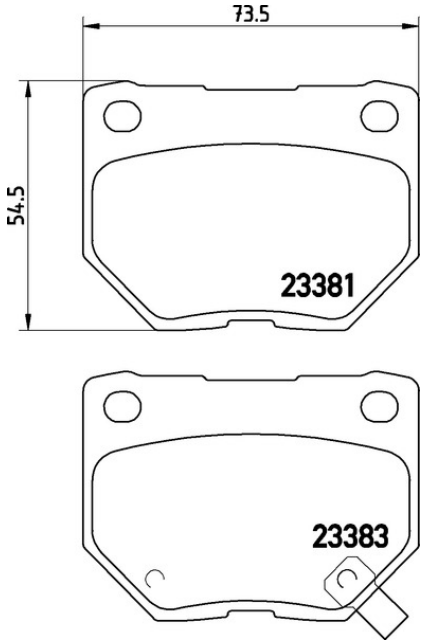

07.B315.19 th 16mm

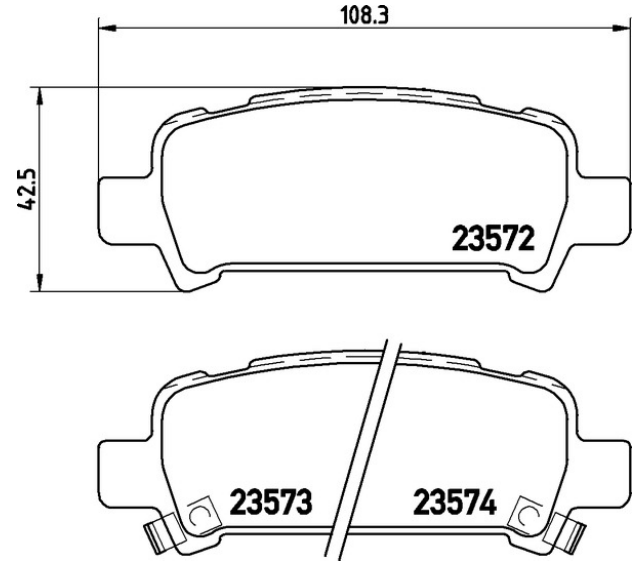

07.B315.17 th 14.5mm

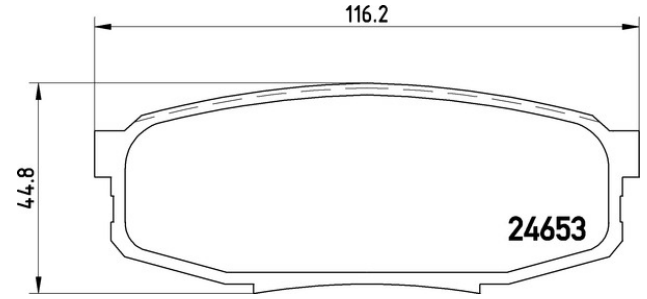

07.B315.20 th 17.4mm

The data contained in this catalogue are provided for information purposes only and therefore may be subject to change.

07.B315.21 – 07.B315.26

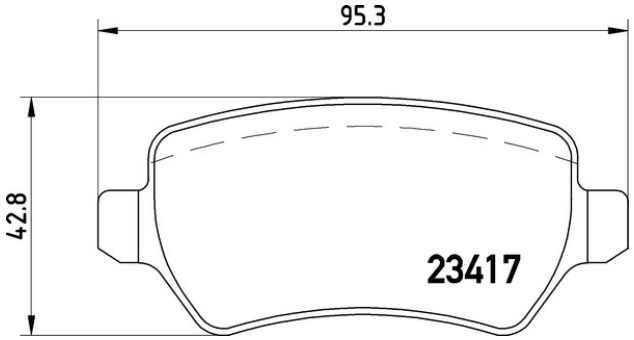

07.B315.21 th 15mm

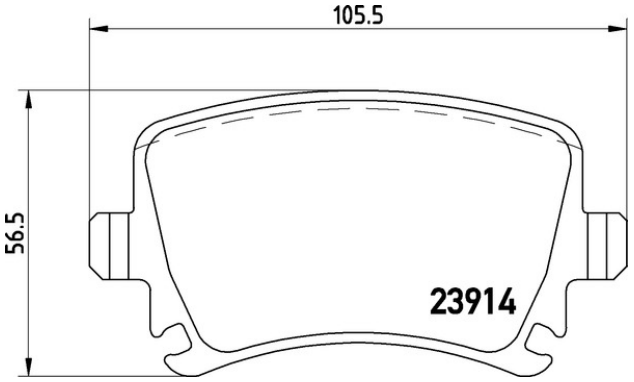

07.B315.22 th 17.2mm

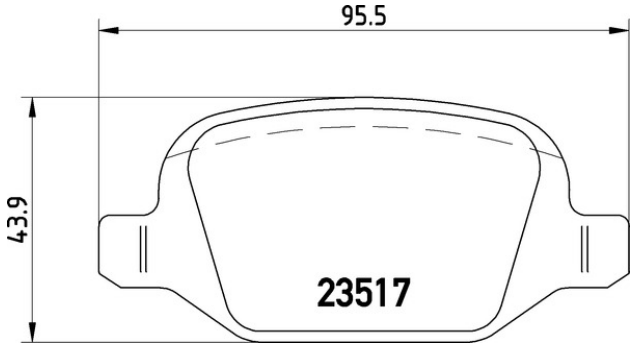

07.B315.23 th 13.7mm

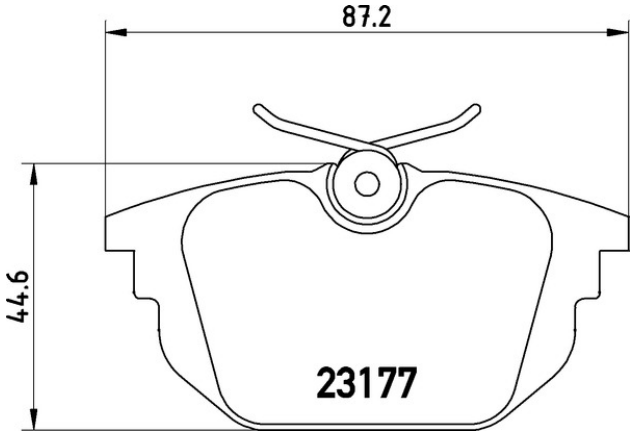

07.B315.24 th 14mm

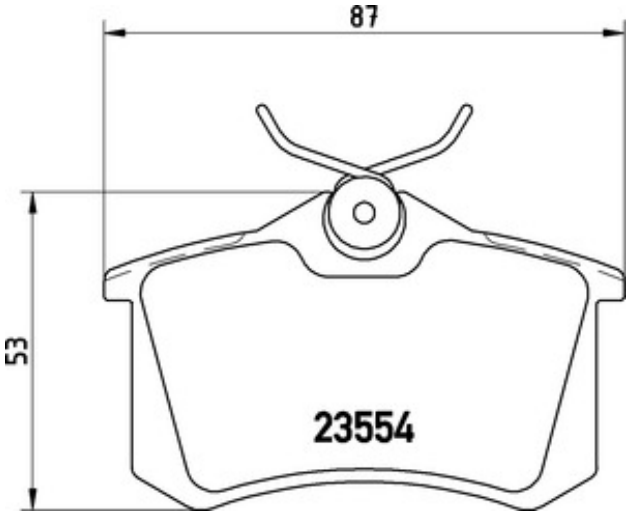

07.B315.25 th 15mm

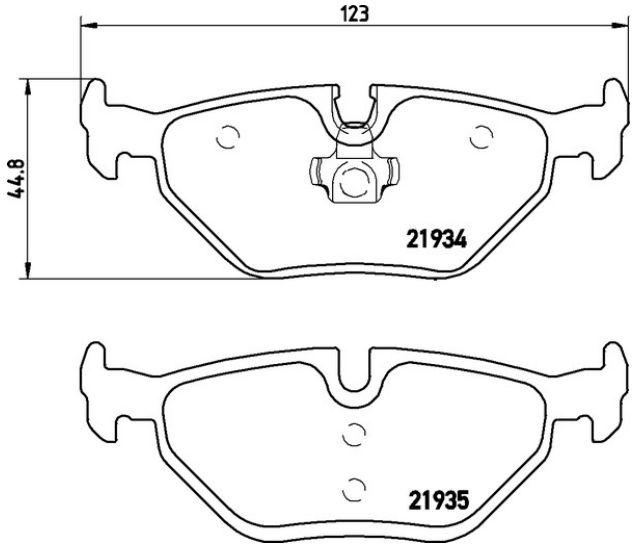

07.B315.26 th 17mm

The data contained in this catalogue are provided for information purposes only and therefore may be subject to change.

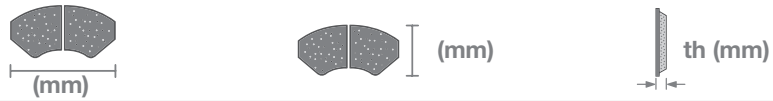

07.B315.27 – 07.B315.32

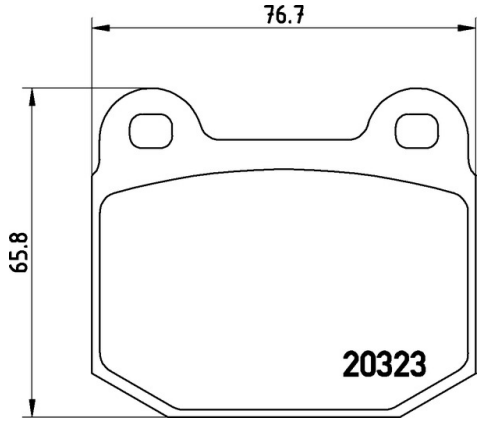

07.B315.27 th 15mm

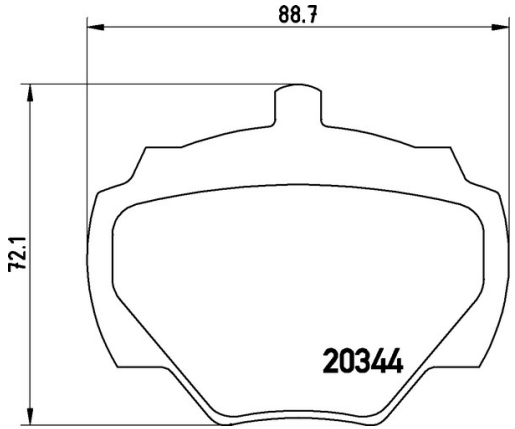

07.B315.28 th 15mm

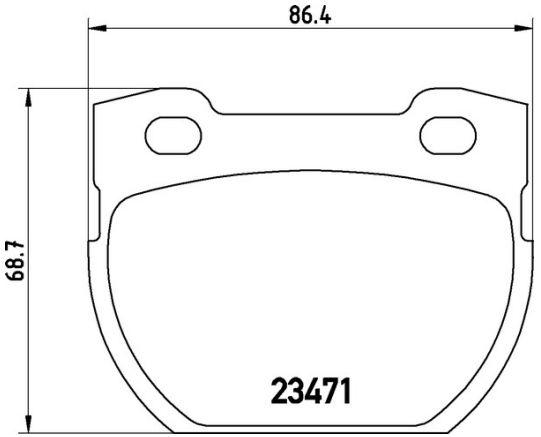

07.B315.29 th 15mm

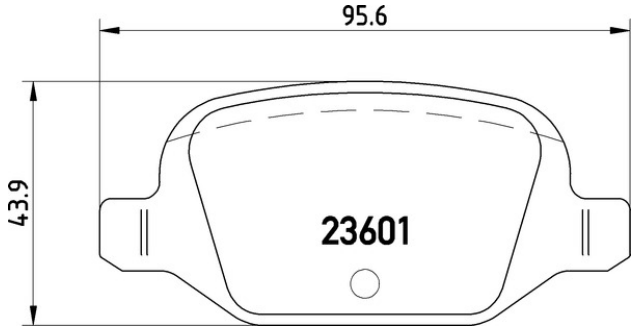

07.B315.30 th 13.7mm

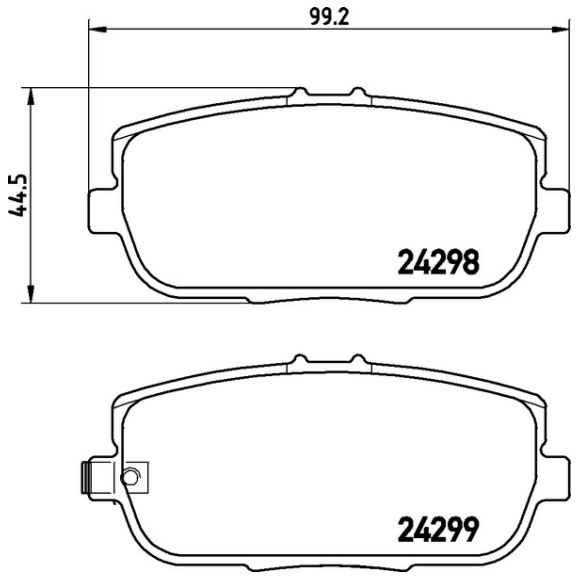

07.B315.31 th 14mm

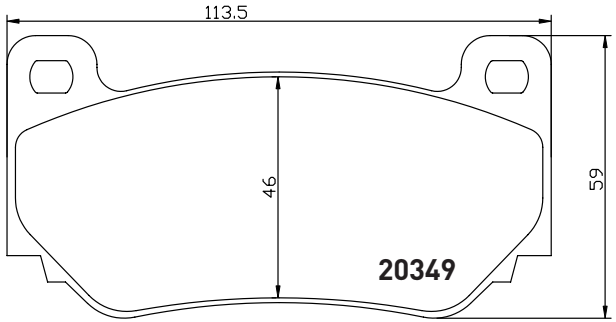

07.B315.32 th 16mm

The data contained in this catalogue are provided for information purposes only and therefore may be subject to change.

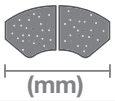

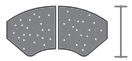

07.B315.34 – 07.B315.40

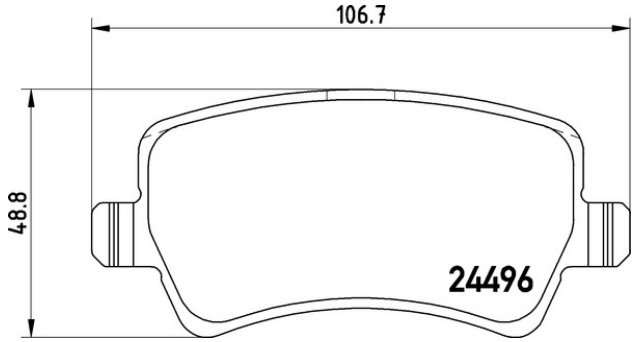

07.B315.34

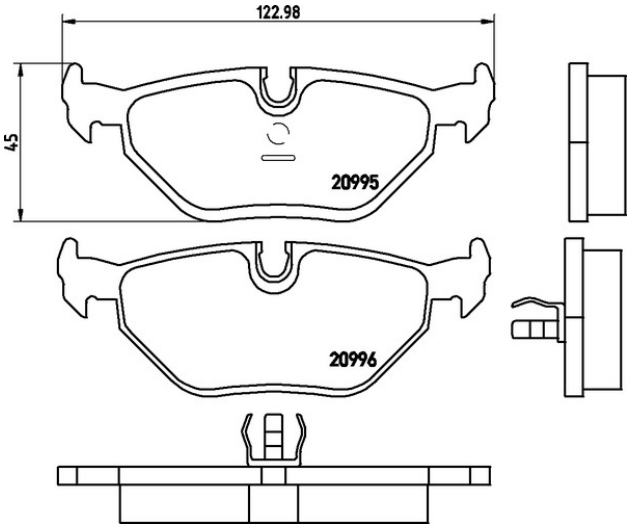

07.B315.35

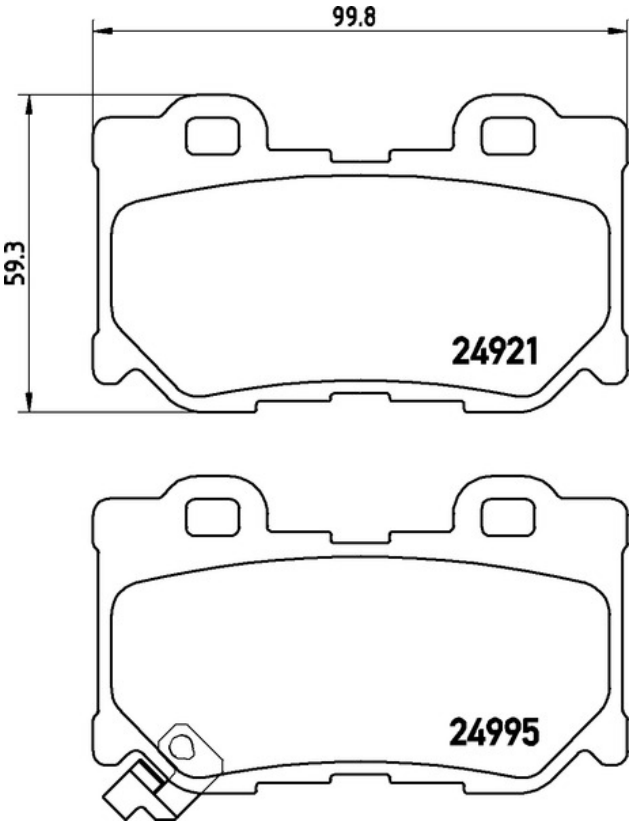

07.B315.40

The data contained in this catalogue are provided for information purposes only and therefore may be subject to change.

RECOMMENDED BRAKE PAD BEDDING PROCEDURE

For information

It is very important to follow proper brake bedding procedure following installation. This is necessary not only for optimum performance of the system, but also to avoid onset of judder (vibration felt through brake and steering).
When fitting pads to used discs, the discs must be in good condition and be within the original manufacturer's manufacturing tolerances. In case of any doubt, new discs should be fitted.
Be aware that with new brake system components, the braking performance will be reduced until the pads and discs are fully bedded.
Use extreme caution while driving the vehicle under these conditions. If done on public roads obey all traffic laws and do not endanger yourself or others.
The purpose of this procedure is to gradually increase the temperature in the components without thermal shock and to mate the brake pad and disc friction surfaces, generating a uniform transfer layer.
Perform at least 20 brake applications using medium deceleration (approximately 60% of maximum) starting from 60mph and slowing to 20mph. Do not come to a stop. Accelerate back to the starting speed allowing 20-30 seconds before beginning the next brake application.
A'er completion, drive the vehicle for at least 5 minutes with little or no braking in order to adequately cool the components.
When it can be done legally, or on a closed circuit, a secondary bedding operation is beneficial. Repeat the above procedure for 5 to 10 brake applications increasing the starting speed to 80mph and increasing the deceleration rate to 80% of maximum. After completion, drive the vehicle for at least 10 minutes with little or no braking in order to adequately cool the components.
The system is now ready for normal use. This entire procedure must be complete before driving the vehicle as normal. It is especially important that this process is completed before any extended same-speed driving is done (i.e. Motorway travel). Failure to follow these instructions greatly increases the likelihood of judder development.

DISCLAIMER OF WARRANTY

Warning

Installation of these pads should only be performed by person experienced in the installation and proper operation of brake system. These are high performance components which will not function as intended if misused or if not installed properly to the correct specifications. It is the responsibility of the person installing any brake component to determine the suitability of the component for that particular application.
By purchasing this product and opening this box purchasers expressly acknowledge, understand and agree that they take, select and purchase these pads from Brembo, its affiliates, distributors and agents (collectively, "Brembo") "AS IS" and "WITH ALL FAULTS". The entire risk as to the quality and performance of these pads is with the purchasers. Should the goods prove defective following their purchase, the purchasers assume the entire cost for all necessary servicing or repair or any resulting liability. Brembo makes no warranties whatsoever, expressed or implied, oral or written, to purchasers or any users of these products, Brembo expressly disclaims any implied warranty of merchantability or warranty of fitness for a particular purpose, including fitness of these pads. By purchasing this product and opening this box, purchasers expressly acknowledge that Brembo does not make or cause to make any representation or promise to purchasers which relate to the brake pads, that becomes part of the basis of the bargain between Brembo and purchasers. Purchasers expressly affirm that they are relying upon their own skill and judgement in selecting and purchasing these goods as suitable for purchaser
intended use. Purchasers understand and agree that no officer/director, salesperson, distributor or agent of Brembo has any authority to make any statement contrary to the terms of this disclaimer and agreement. On the contrary, Brembo disavows any statement contrary to what is written above. In the event that any person expressly or impliedly cause representations or statements contrary to this disclaimer of all warranties, expressed or implied, then such person shall indemnify and hold harmless Brembo in the event of any claim, liability, demand, legal action or proceeding against, or cost or expense incurred by, Brembo as a result thereof.

NOTES

NOTES

Brembo S.p.A. accepts no responsibility for any differences between the codes, types, measurements, quantities, colours, images and/or other information provided by us and the actual ones.

Brembo S.p.A.
Via Brembo 25
24035 Curno (BG) - Italy
Tel.: +39 035 605 1111
Fax: +39 035 605 2766
HighPerformance@brembo.it

Release no. b/2013

www.brembo.com